FIBOX
Enclosing innovations

EK EKPK 180 T

Sample photo

Order symbol:	EKPK 180 T	**EAN**:	6418074013897
Product nbr:	2538155	**El. number**:	
Description:	Enclosure, PC	Finland:	3425477
Remarks:	Transparent cover	Electric No. Italy:	7502055
		Electric No. Sweden:	2538155

Including: Flanged Base with screws for mounting plate, cover with PUR gasket and polyamide cover screws.

Dimensions:	Length	Width	Height
mm:	380	280	180
inch:	15.0	11.0	7.1

Materials:

Material:	Polycarbonate
Base colour:	RAL 7035 -light grey
Cover screws material:	Polyamide
Cover colour:	Clear transparent
Cover screws colour:	Grey
Gasket material:	Polyurethane

Temperatures:

Temperature °C (short term):	-40 … 120 °C
Temperature °C (continuous):	-40 … 80 °C
Temperature °F (short term):	-40 … 250 °F
Temperature °F (continuous):	-40 … 175 °F

Accessories:

EKPK	Base, PC

Accessories:

EKPL	Base, PC
EKP 30-G	Cover
EKP 80-G	Cover
EKP 30-T	Cover
EKP 80-T	Cover
EKPVT	Mounting plate
EKPXT	Mounting plate isolated
EKV 22	DIN-35 Mounting rail
EKV 32	DIN-35 Mounting rail
EKPZR	Extension frame

Rating:

Ingress Protection (EN 60529): IP66/IP67
Impact Resistance (EN 62262): IK08
Electrical insulation: Totally insulated
Halogen free (DIN/VDE 0472, Part 815): 1
UV resistance: UL 508
Flammability Rating: UL 746C 5"
Glow Wire Test (IEC 695-2-1) °C: 960
NEMA Class: NEMA 1, 3, 3S, 4, 4X, 6, 6P, 12

Certificates:

Germanischer Lloyd (GL)
SGS Fimko
Lloyds Register of Shipping (LR)
Gost R

EK 380x280x230

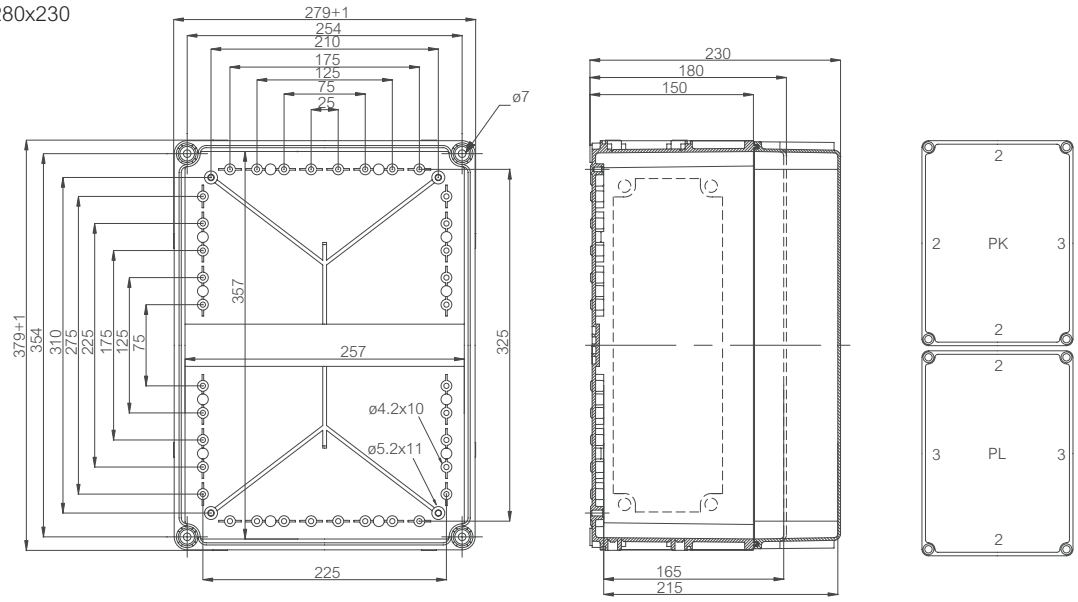

© Fibox Oy, Data subject to change without notice (printed: 11.10.2017)