Power Supplies SITOP and LOGO!Power

Catalog KT 10.1 · 2008

SITOP

SIEMENS

Related catalogs

SIMATIC TOP connect KT 10.2
System cables for SIMATIC S7

E86060-K2410-A201-A4-7600

Electrical wholesale trade catalog
Installation technology, low-voltage switch-gear, automation technology, drive systems

E86060-K1003-A101-A9-7600

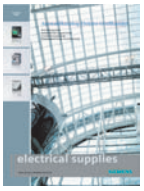

Low voltage controls and distribution LV 1
SIRIUS, SENTRON, SIVACON

E86060-K1002-A101-A7-7600

SIMATIC ST 70
Components for
Totally Integrated Automation and
Micro Automation
E86060-K4670-A101-B1-7600
E86060-K4670-A151-A3-7600 (News)

SINUMERIK & SIMODRIVE NC 60
Automation Systems for
Machine Tools

E86060-K4460-A101-B2-7600

SINUMERIK & SINAMICS NC 61
Automation Systems for
Machine Tools

E86060-K4461-A101-A2-7600

Motion Control PM 21
SIMOTION, SINAMICS S120
and motors for production machines

E86060-K4921-A101-A1-7600

PC-based Automation ST PC
Embedded Automation and
PC-based Automation

E86060-K4670-B111-B8-7600

SITRAIN ITC
Training for Automation and
Industrial Solutions

E86060-K6850-E101-B8-7600

Catalog CA 01
The Offline Mall of Automation and Drives

E86060-D4001-A100-C6-7600 (CD-ROM)
E86060-D4001-A500-C6-7600 (DVD)

A&D Mall

Internet:
www.siemens.com/automation/mall

SITOP
Power Supplies SITOP and LOGO!Power

Catalog KT 10.1 · 2008

The products and systems described in this catalog are manufactured and distributed under application of a certified quality management system in accordance with DIN EN ISO 9001 (Certificate Registration No. 1108). The certificate is recognized by all IQNet countries.

Supersedes:
Catalog KT 10.1 · 2004

The products in this catalog are also included in the electronic catalog CA 01.
Order No.:
E86060-D4001-A110-C6-7600 (CD-ROM)
E86060-D4001-A510-C6-7600 (DVD)

Contact your local Siemens representative for further information.

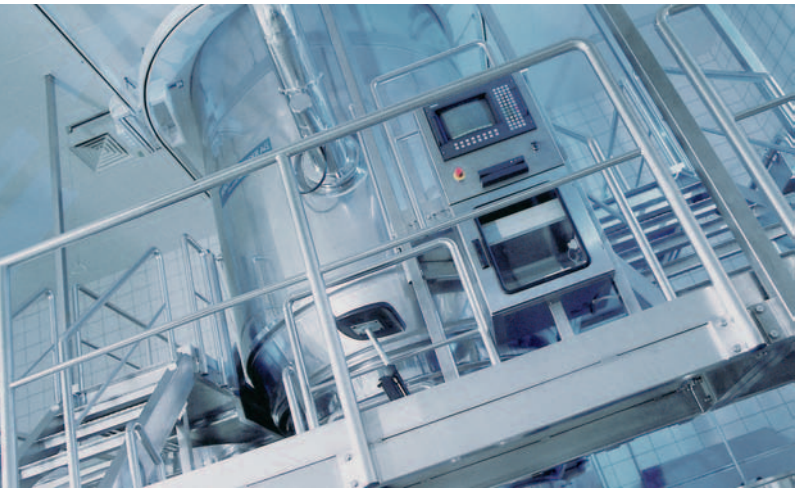

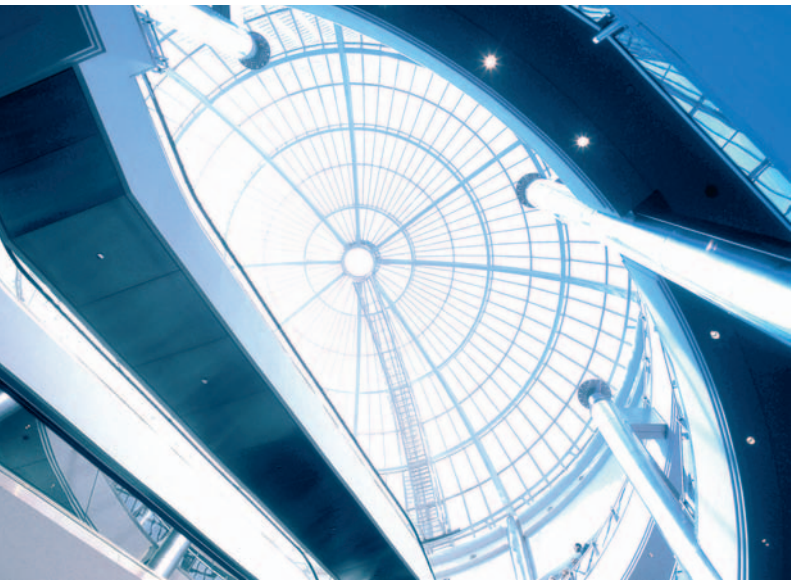

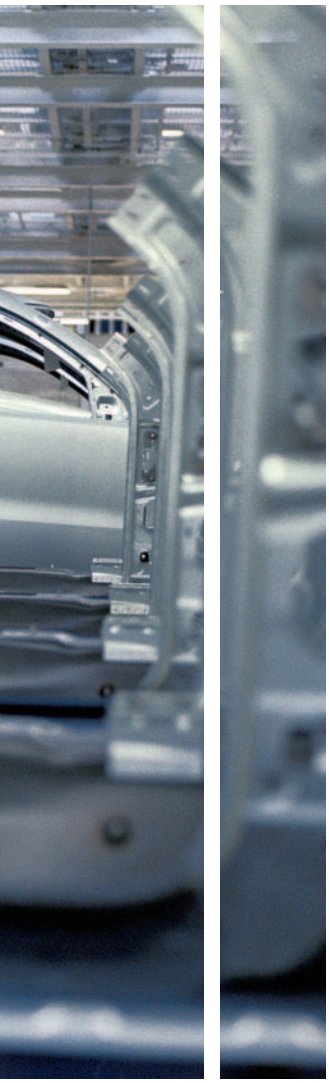

Answers for Industry.

Siemens Industry answers the challenges in the manufacturing and the process industry as well as in the building automation business. Our drive and automation solutions based on Totally Integrated Automation (TIA) and Totally Integrated Power (TIP) are employed in all kinds of industry. In the manufacturing and the process industry. In industrial as well as in functional buildings.

Siemens offers automation, drive, and low-voltage switching technology as well as industrial software from standard products up to entire industry solutions. The industry software enables our industry customers to optimize the entire value chain – from product design and development through manufacture and sales up to after-sales service. Our electrical and mechanical components offer integrated technologies for the entire drive train – from couplings to gear units, from motors to control and drive solutions for all engineering industries. Our technology platform TIP offers robust solutions for power distribution.

The high quality of our products sets industry-wide benchmarks. High environmental aims are part of our eco-management, and we implement these aims consistently. Right from product design, possible effects on the environment are examined. Hence many of our products and systems are RoHS compliant (Restriction of Hazardous Substances). As a matter of course, our production sites are certified according to DIN EN ISO 14001, but to us, environmental protection also means most efficient utilization of valuable resources. The best example are our energy-efficient drives with energy savings up to 60 %.

Check out the opportunities our automation and drive solutions provide. And discover how you can sustainably enhance your competitive edge with us.

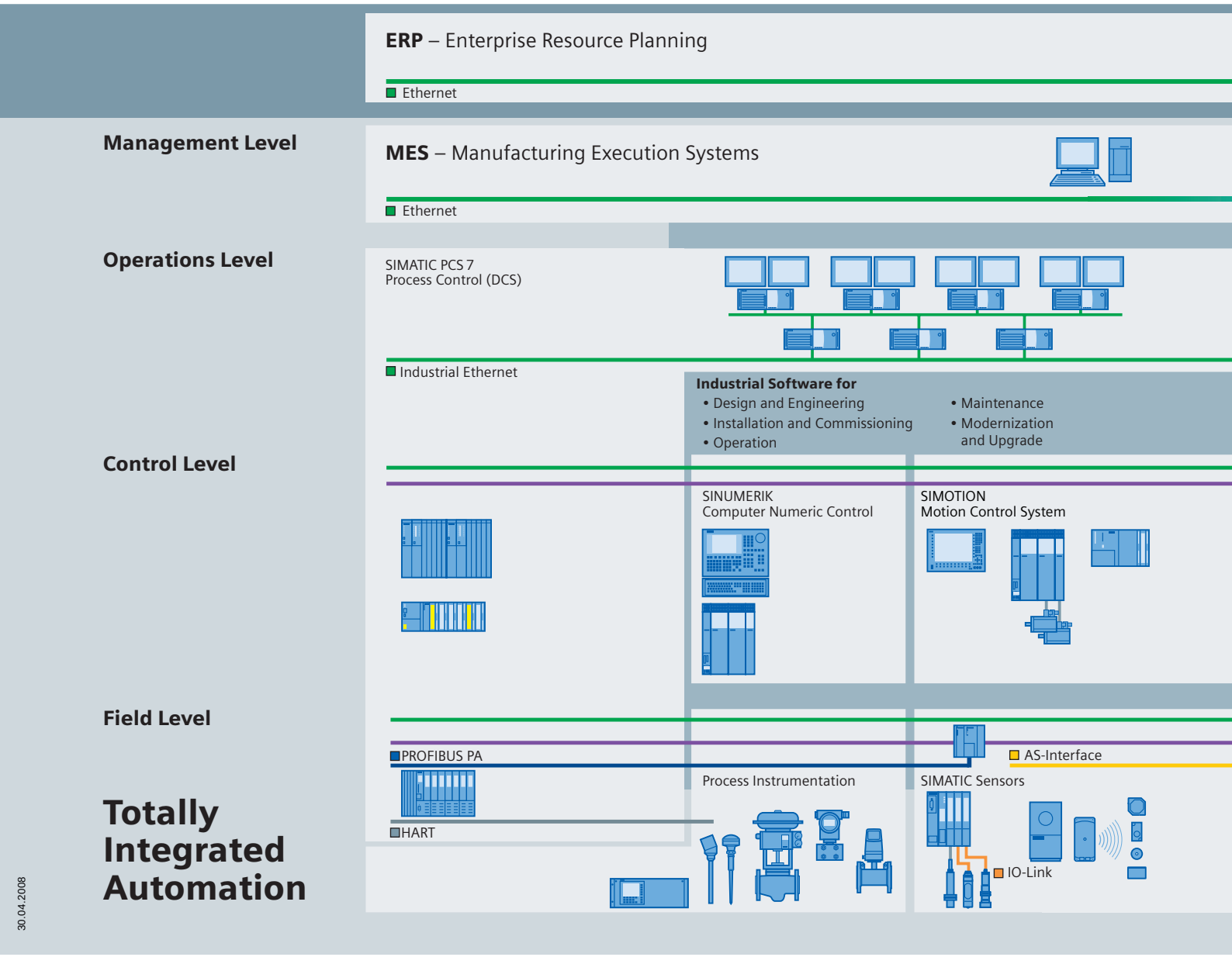

Setting standards in productivity and competitiveness.

Totally Integrated Automation.

Thanks to Totally Integrated Automation, Siemens is the only provider of an integrated basis for implementation of customized automation solutions – in all industries from inbound to outbound.

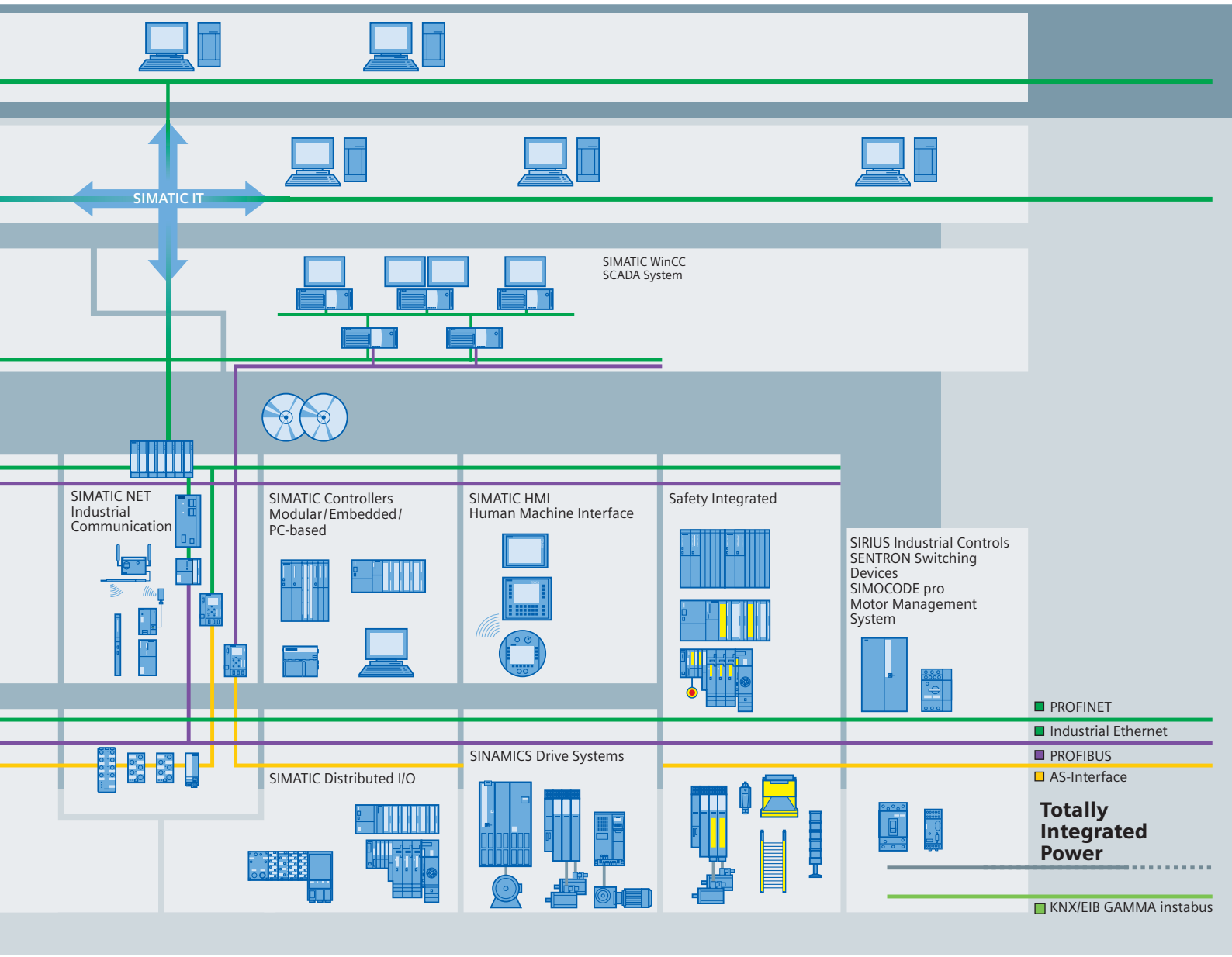

TIA is characterized by its unique continuity.

It provides maximum transparency at all levels with reduced interfacing requirements – covering the field level, production control level, up to the corporate management level. With TIA you also profit throughout the complete life cycle of your plant – starting with the initial planning steps through operation up to modernization, where we offer a high measure of investment security resulting from continuity in the further development of our products and from reducing the number of interfaces to a minimum.

The unique continuity is already a defined characteristic at the development stage of our products and systems.

The result: maximum interoperability – covering the controller, HMI, drives, up to the process control system. This reduces the complexity of the automation solution in your plant. You will experience this, for example, in the engineering phase of the automation solution in the form of reduced time requirements and cost, or during operation using the continuous diagnostics facilities of Totally Integrated Automation for increasing the availability of your plant.

The response to all challenges: SITOP modular

The first modular power supply meets the highest requirements for reliable 24 volts in global use. The rugged DIN rail devices in a metal housing can be expanded with all the SITOP add-ons. This modularity offers advantages with respect to flexibility, simple handling and price/performance ratio.
Even without add-on modules, the primary switched-mode power supplies offer many functions. The wide-range input enables connection to the most diverse supply networks worldwide and compensates even for large voltage fluctuations. Even brief interruptions in the power supply are bridged. The single-phase power supplies with 5 A and 10 A rated output current even have an ultra-wide-range input and are thus also suitable for operation on two phases of a 3-phase supply network. The new three-phase 20 A basic device from SITOP modular is impressive proof that high functionality and performance power do not automatically require a lot of space. It is among the most slimline and compact devices in its performance class.
Despite its compact design, SITOP modular has significant performance reserves and thus offers a high degree of security. The integral power-boost function briefly supplies up to 3 times the rated current, and 50 % extra power is available for 5 seconds. Loads with a high starting current can thus be switched on without any problems. You can choose between automatic restart and switch-off in response to overload.

modular

- For demanding applications from 5 to 40 A
- Rugged metal enclosure for DIN-rail mounting
- 5 A and 10 A devices with ultra-wide-range input up to 500 V AC for single-phase and dual-phase operation
- 20 A and 40 A devices with wide-range input for single-phase or three-phase connection
- The fully innovated three-phase 20 A device now requires less than half the mounting surface
- Efficiency up to 93 %
- Power boost up to 3 times rated current
- 50 % extra power available for 5 seconds
- Selectable short-circuit behavior: Constant current with automatic restart or latching shutdown
- Adjustable output voltage up to 28.8 V for compensating voltage drops
- 3 LEDs for signaling the operating status
- Evaluation of operating statuses via signaling module
- Switchable output characteristic for uniform power distribution in case of parallel operation
- Temperature range from 0 to +60 °C
- Certified in accordance with CE and cULus/CSA
- Functionally expandable with all SITOP add-ons

modular

smart

Slimline universal power supplies: SITOP smart

Slimline dimensions, strong performance. The SITOP smart range of power supplies requires less space on the mounting rail and offers high functionality at a reasonable price.

Due to the flexible overload response, even loads with high starting currents can be switched on without problem. If required, 50 % extra power is made available for 5 seconds.

The single-phase versions also continuously supply 120 % of the rated power provided the ambient temperature does not exceed 45 °C.

- For standard 24 V applications from 2.5 to 10 A
- Slimline and compact design with a width of only 32.5 mm as well as 50 mm and 70 mm
- No lateral installation clearances required
- Efficiency up to 93 %
- 50 % extra power available for 5 seconds
- Continuously 120 % of the rated power up to 45 °C for the single-phase devices
- Constant current with automatic restart
- Adjustable output voltage from 22.8 to 28.0 V for compensation of voltage drops
- Green LED for "24 V OK"
- Temperature range from 0 to +60 °C
- Certified in accordance with CE, UL, CSA, GL and compliance with the ATEX guidelines
- Functionally expandable with DC UPS module, redundancy module and the SITOP select diagnostics module

smart

Add-ons

SITOP add-ons – the bodyguards for special tasks

Supply network irregularities in the millisecond range are compensated for supremely well by all our power supplies. Large fluctuations or even power failures, however, require special measures: Our buffer module ensures optimal protection here in the case of brief failures, and with longer failures the compact DC UPS modules from SITOP ensure continued operation - even for hours! If you want to exclude the possibility of a failure, you can additionally rely on the redundancy module. And the diagnostics module enables fast and preventive fault analysis.

- The **signaling module** with signal contacts and remote ON/OFF function optimally integrates the devices of SITOP modular into automated plants.
- For maximum availability, the **redundancy module** decouples SITOP power supplies of the same type.
- The **buffer module** bridges short power failures up to 3 seconds with capacitors as energy storage.
- The **SITOP select diagnostics module** offers selective protection of individual 24 V paths against overload and short circuits. With this protection and by means of fast fault localization, downtimes can be reduced to a minimum.
- **DC UPS modules** and **battery modules** protect against longer lasting power failures.

The facets

Even individual infeed tasks are covered by the SITOP power supplies. Whether for standard applications or unusual output voltages, there are real multi-talents to be found in the SITOP range:

SITOP power 0.5: With a width of merely 22.5 mm, these mini devices are the slimmest of the SITOP family and are therefore especially suitable for supplying low-voltage controls.

SITOP power flexi: Limitless diversity thanks to variable output. The innovative circuit concept permits a flexible adjustment of the output voltage between 3 V and 57 V.

SITOP power dual: The electronic power supply for the control cabinet. The industry-standard rail-mounted device has two 15 V outputs. For example, for electronic loads supplied with ±15 volts.

SITOP power 24 V/2.5 A, 4 A and 10 A: These devices with universal input can be connected to single-phase AC as well as to DC systems.

The DC/DC converter: With 38 V to 121 V DC input range for supply from battery and DC systems.

SITOP PSA 100E: The single-phase power supply for basic industrial requirements from 2.5 to 12 A.

The facets

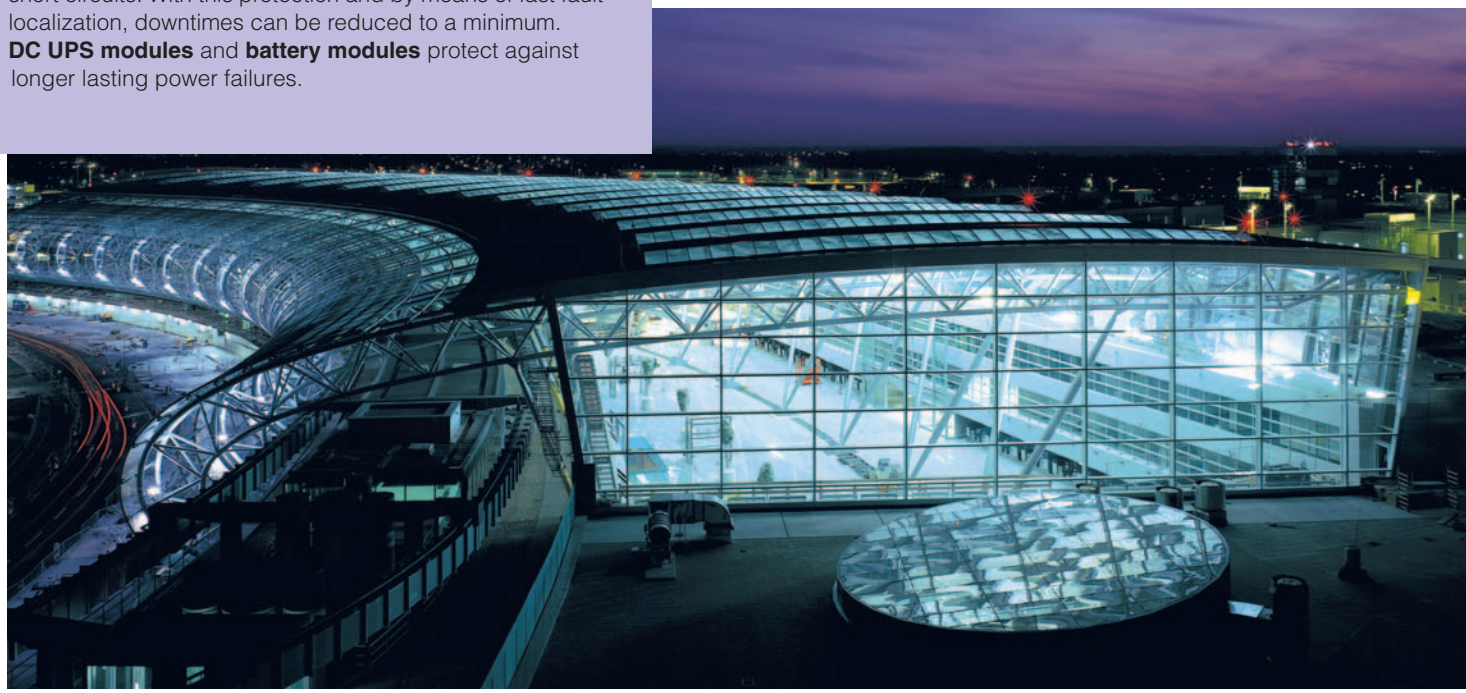

SIMATIC-Design

SITOP in SIMATIC design

The SITOP "Design power supplies" have been developed on the basis of the design of the SIMATIC automation systems. However, thanks to their special features, they can also be used optimally in many other applications.

Design S7-200: 24 V/3.5 A. The flat power supply in the design of the micro PLC is especially suitable for applications with restricted headroom and depth in the control cabinet.

Design S7-300: 24 V/2 A, 5 A and 10 A. Designed as upstream power supplies of the S7-300 CPUs, they can be simply snapped onto the S7 rail and connected with the CPU using a connecting comb. The 2 A and 5 A devices are also available as outdoor versions and can easily handle temperatures between -25 °C and +70 °C as well as higher vibration and shock loads.

Design ET 200B: 24 V/5 A and 10 A. Slimline devices make a particularly strong impact where installation depth is restricted. They can even find enough space in covered machine supports and hinged frames.

LOGO!Power

The mini power supplies are available with output voltages of 5 V, 12 V and 15 V in two performance classes and 24 V in three performance classes, and they can even be installed in small distribution boards thanks to their flat stepped profiles.

The function "Constant current in event of overload" even allows the connection of difficult loads. The wide-range input, a wide temperature range and extensive certification make LOGO! power supplies the universal devices for use in a host of applications.

LOGO!Power

Selection guide

In order to enable you to find the right controlled power supply for any application as quickly as possible, we have presented in the table below an overview of all the power supplies in the catalog sorted according to input voltages, output voltages and output current.

Selection guide

Input voltage			AC voltage single-phase 120 V AC, 230 V AC	AC voltage three-phase 400 V, 500 V 3 AC	DC voltage 24 V DC	Other DC voltages
Output voltage	**Output current**	**Order No.**				
5 V DC	**3 A**	**6EP1 311-1SH02**	Page 12/2			
	6.3 A	**6EP1 311-1SH12**	Page 12/2			
12 V DC	**1.9 A**	**6EP1 321-1SH02**	Page 12/4			
	4.5 A	**6EP1 322-1SH02**	Page 12/4			
15 V DC	**1.9 A**	**6EP1 351-1SH02**	Page 12/6			
	4 A	**6EP1 352-1SH02**	Page 12/6			
	2x 3.5 A	**6EP1 353-0AA00**	Page 10/2			
24 V DC	**0.375 A**	**6EP1 731-2BA00**				Page 2/2
	0.5 A	**6EP1 331-2BA10**	Page 2/2			
	1.3 A	**6EP1 331-1SH02**	Page 12/8			
	2 A	**6EP1 732-0AA00**				Page 2/2
		6ES7 307-1BA00-0AA0	Page 2/3			
		6ES7 305-1BA80-0AA0			Page 2/3	Page 2/3
	2.5 A	**6EP1 332-2BA10**	Page 3/2			
		6EP1 332-1SH12	Page 3/2			Page 3/2
		6EP1 332-1SH42	Page 12/8			
		6EP1 232-1AA00	Page 13/2			
	3.5 A	**6EP1 332-1SH31**	Page 3/3			
	3.7 A	**6EP1 332-2BA00**	Page 3/3			
	4 A	**6EP1 332-1SH22**	Page 3/2			Page 3/2
		6EP1 332-1SH51	Page 12/8			
		6EP1 232-1AA10	Page 13/2			
	5 A	**6EP1 333-3BA00**	Page 4/2	Page 7/2		
		6EP1 333-2AA01	Page 4/2			
		6EP1 333-2BA01	Page 4/2			
		6ES7 307-1EA00-0AA0	Page 4/3			
		6ES7 307-1EA80-0AA0	Page 4/3			
		6EP1 333-1AL12	Page 4/3			
	6 A	**6EP1 233-1AA00**	Page 13/2			
	10 A	**6EP1 334-3BA00**	Page 5/2	Page 7/2		
		6EP1 334-2AA01	Page 5/2			
		6EP1 334-2BA01	Page 5/2			
		6ES7 307-1KA01-0AA0	Page 5/3			
		6EP1 334-1AL12	Page 5/3			
		6EP1 334-1SH01	Page 5/3			Page 5/3
		6EP1 434-2BA00		Page 7/2		
	12 A	**6EP1 234-1AA00**	Page 13/3			
	20 A	**6EP1 336-3BA00**	Page 6/2			
		6EP1 436-3BA00		Page 7/3		
		6EP1 436-3BA01		Page 7/3		
		6EP1 436-2BA00		Page 7/3		
	30 A	**6EP1 437-2BA00**		Page 7/6		
	40 A	**6EP1 337-3BA00**	Page 6/2			
		6EP1 437-3BA00		Page 7/6		
		6EP1 437-2BA10		Page 7/6		

Continued on page 1/11.

Selection guide (continued)

Input voltage			AC voltage single-phase 120 V AC, 230 V AC	AC voltage three-phase 400 V, 500 V 3 AC	DC voltage 24 V DC	Other DC voltages
Output voltage	**Output current**	**Order No.**				
Add-on modules	**Signaling module**	**6EP1 961-3BA10**			Page 8/2	
	Buffer module	**6EP1 961-3BA00**			Page 8/2	
	Redundancy module	**6EP1 961-3BA20**			Page 8/2 Page 8/4	
	Diagnostics module	**6EP1 961-2BA00**				
24 V DC UPS	**6 A**	**6EP1 931-2DC21**			Page 9/8	
		6EP1 931-2DC31			Page 9/8	
		6EP1 931-2DC42			Page 9/8	
	15 A	**6EP1 931-2EC21**			Page 9/8	
		6EP1 931-2EC31			Page 9/8	
		6EP1 931-2EC42			Page 9/8	
	40 A	**6EP1 931-2FC21**			Page 9/8	
		6EP1 931-2FC42			Page 9/8	
Battery modules	**1.2 Ah**	**6EP1 935-6MC01**			Page 9/12	
	2.5 Ah	**6EP1 935-6MD31**			Page 9/13	
	3.2 Ah	**6EP1 935-6MD11**			Page 9/14	
	7 Ah	**6EP1 935-6ME21**			Page 9/15	
	12 Ah	**6EP1 935-6MF01**			Page 9/16	
48 V DC	**10 A**	**6EP1 456-2BA00**		Page 10/4		
	20 A	**6EP1 457-3BA00**		Page 10/4		
3-57 V DC	**10 A / 120 W**	**6EP1 353-2BA00**	Page 10/2			

Note:

Some power supplies are already listed in the catalog as SIPLUS versions. You can request other devices in versions of varying ruggedness on the Internet at www.siemens.com/siplus under "Enquiry form for special solutions".

Notes

SITOP 24 V
Single-phase

2

SITOP 24 V
Single-phase

Output currents up to 2 A

2

Overview

The smallest ones

The DC/DC converter

Application

The optimum power supply units for automation solutions in the lower performance range; with wide-range input for AC or DC voltages; thanks to their compact and slim design, they are particularly suitable for solutions where space is limited and in conjunction with low-voltage switchgear.

The DC/DC converter for supply from battery and DC systems; with a wide input voltage range from 38 V to 121 V DC.

Technical specifications

Power supply, type	**0.5 A**	**0.375 A**	**2 A**
Order No.	**6EP1 331-2BA10**	**6EP1 731-2BA00**[1]	**6EP1 732-0AA00**
Input			
Rated voltage $V_{in\ rated}$	Single-phase AC **120 - 230 V AC** wide-range input	DC voltage **48 - 220 V DC** wide-range input	DC voltage **48 - 110 V DC** wide-range input
Voltage range	93 ... 264 V AC	30 ... 264 V DC (30 ... 187 V AC)	38 ...121 V DC
Overvoltage resistance	2.3 x $V_{in\ rated}$, 1.3 ms		
Mains buffering at $I_{out\ rated}$	> 10 ms at V_{in} = 230 V	> 10 ms at V_{in} = 220 V	> 5 ms at V_{in} = 48 V
Rated line frequency; rated line-frequency range	50/60 Hz, 47 ... 63 Hz	–	–
Rated current $I_{in\ rated}$	0.22 - 0.13 A	0.3 - 0.06 A	1.2 - 0.5 A
Switch-on current limit (+25 °C)	< 23 A, typ. 1 ms	< 35 A, typ. 3 ms	< 33 A
I^2t	0.3 A^2s	1.2 A^2s	
Built-in line-side fuse	T 2 A/250 V (not accessible)	F 4 A/250 V (not accessible)	T 2.5 A (not accessible)
Recommended miniature circuit breaker (IEC 898) in the mains power input	From 3 A, Characteristic C	From 6 A, Characteristic C, suitable for DC	10 ... 25 A, Characteristic B, or 6 to 25 A, Characteristic C, DC-compatible
Output			
Rated voltage $V_{out\ rated}$	Controlled, isolated DC voltage **24 V DC**	Controlled, isolated DC voltage **24 V DC**	Controlled, isolated DC voltage **24 V DC**
Total tolerance	±3 %	±3 %	±1 %
• Static mains compensation	Approx. 0.2 %	Approx. 0.1 %	Approx. 0.1 %
• Static load smoothing	Approx. 0.7 %	Approx. 0.1 %	Approx. 0.4 %
Residual ripple	< 150 mV_{pp} (typ. 50 mV_{pp})	< 150 mV_{pp} (typ. 50 mV_{pp})	< 100 mV_{pp}
Spikes (bandwidth: 20 MHz)	< 240 mV_{pp} (typ. 150 mV_{pp})	< 240 mV_{pp} (typ. 50 mV_{pp})	< 300 mV_{pp}
Adjustment range	–	–	23.5 to 26.5 V
Status display	Green LED for 24 V OK	Green LED for 24 V OK	Green LED for 24 V OK
Response on activation/deactivation	No overshoot of U_{out} (soft start)	No overshoot of U_{out} (soft start)	Overshoot of U_{out} on startup max. 25 V
Startup delay/voltage rise	< 1.5 s/typ. 20 ms	< 2.5 s/typ. 90 ms	< 3 s/typ. 30 ms
Rated current $I_{out\ rated}$	**0.5 A**	**0.375 A**	**2 A**
Current range			
• Up to +45 °C	0 ... 0.5 A	0 ... 0.375 A	0 ... 2 A
• Up to +60 °C	0 ... 0.5 A (up to +70 °C)	0 ... 0.375 A	0 ... 2 A (up to +70 °C)
Dynamic overcurrent on			
• Power-up on short-circuit	Constant current approx. 0.6 A		
• Short-circuit during operation	Constant current approx. 0.6 A	Typ. 2.7 A for 200 ms	
Parallel switching for enhanced performance	Not permissible	Not permissible	Yes, 2 units

Continued on page 2/4.

[1] SIPLUS module 6AG1 931-2BA00-3AA0 for use under medial load (e.g. sulfur chloride atmosphere).

The S7-300 version	The outdoor version
	
The field-proven power supply in SIMATIC S7-300 design; with PS-CPU connecting comb and for snap-mounting on S7 rail.	The power supply unit for extreme environmental conditions in SIMATIC S7-300 design; can be snapped onto S7 rail; with PS-CPU connecting comb.
2 A	**2 A**
6ES7 307-1BA00-0AA0	**6ES7 305-1BA80-0AA0**[2)]
Single-phase AC **120/230 V AC** Set by means of selector switch on device 85 ... 132 V/170 ... 264 V AC	DC voltage **24 - 110 V DC** Wide-range input 16.8 ... 138 V DC
2.3 x $V_{in\ rated}$, 1.3 ms	154 V; 0.1 s
> 20 ms at V_{in} = 93/187 V 50/60 Hz, 47 ... 63 Hz	> 10 ms at $V_{in\ rated}$ –
0.9/0.6 A < 20 A, < 3 ms	2.7 - 0.6 A (4.0 - 0.9 A) < 20 A, < 10 ms
< 1.0 A^2s T 1.6 A/250 V (not accessible) 3 A, Characteristic C	< 5 A^2s T 6.3 A/250 V (not accessible) From 10 A, Characteristic C, suitable for DC
Controlled, isolated DC voltage **24 V DC** ±3 % Approx. 0.1 % Approx. 0.2 %	Controlled, isolated DC voltage **24 V DC** ±3 % Approx. 0.2 % Approx. 0.4 %
< 150 mV_{pp} (typ. < 20 mV_{pp}) < 240 mV_{pp} (typ. < 150 mV_{pp}) – Green LED for 24 V OK No overshoot of V_{out} (soft start)	< 150 mV_{pp} (typ. < 30 mV_{pp}) < 240 mV_{pp} (typ. < 150 mV_{pp}) – Green LED for 24 V OK No overshoot of V_{out} (soft start)
< 3 s/typ. 60 ms **2 A**	< 3 s/typ. 5 ms **2 A (3 A at V_{in} > 24 V)**
0 ... 2 A 0 ... 2 A	0 ... 2 A (3 A) 0 ... 2 A (3 A)
Typ. 10 A for 90 ms Typ. 10 A for 90 ms Not permissible	Typ. 9 A for 270 ms Typ. 9 A for 270 ms Yes, 2 units

Continued on page 2/5.

2) SIPLUS module 6AG1 305-1BA80-2AA0 for temperature range –25 °C to +60 °C and use under medial load (e.g. chlorine sulfur atmosphere). This SIPLUS power supply conforms with standards for electronic equipment used on rolling stock (EN 50155, temperature T1, category 1).

Output currents up to 2 A

	The smallest ones	The smallest ones	The DC/DC converter
Power supply, type	**0.5 A**	**0.375 A**	**2 A**
Order No.	**6EP1 331-2BA10**	**6EP1 731-2BA00**	**6EP1 732-0AA00**
Efficiency			
Efficiency at $V_{out\ rated}$, $I_{out\ rated}$	Approx. 74 %	Approx. 66 %	Approx. 84 %
Power loss at $V_{out\ rated}$, $I_{out\ rated}$	Approx. 4.2 W	Approx. 4.6 W	Approx. 9 W
Closed-loop control			
Dyn. mains compensation ($V_{in\ rated}$ ± 15 %)	Typ. ± 0.3 % V_{out}	Typ. ± 0.3 % V_{out}	Typ. ± 0.3 % V_{out}
Dynamic load smoothing (I_{out}: 50/100/50 %)	Typ. ± 0.7 % V_{out}	Typ. ± 0.4 % V_{out}	Typ. ± 0.8 % V_{out}
Load step settling time			
• 50 to 100 %	Typ. 1.5 ms	Typ. 2 ms	< 5 ms (typ. 2.5 ms)
• 100 to 50 %	Typ. 1.5 ms	Typ. 2 ms	< 5 ms (typ. 2.5 ms)
Protection and monitoring			
Output overvoltage protection	Yes, acc. to EN 60950	Yes, acc. to EN 60950	Yes, suppress diode at output
Current limit	0,55 ... 0.65 A	0,41 ... 0.49 A	2,1 ... 3 A
Short-circuit protection	Constant current characteristic up to 0 V	Electronic shutdown, automatic restart	Electronic shutdown, automatic restart
Sustained short-circuit current rms value	< 0.65 A	< 0.9 A	< 2 A
Overload/short-circuit indicator	–	–	–
Safety			
Primary/secondary electrical isolation	Yes, safety extra-low output voltage V_{out} according to EN 60950 and EN 50178	Yes, safety extra-low output voltage V_{out} according to EN 60950 and EN 50178	Yes, safety extra-low output voltage V_{out} according to EN 60950
Protection class	Class I	Class I	Class I
Leakage current	< 3.5 mA	< 3.5 mA	< 3.5 mA (typ. 0.7 mA)
German Technical Inspectorate approval	Yes	Yes	–
CE mark	Yes	Yes	Yes
UL/cUL (CSA) approval	cULus-listed (UL 508, CSA C22.2 No. 142), File E143289; cURus-recognized (UL 60950, CSA C22.2 No. 60950), File E151273	cULus-listed (UL 508, CSA C22.2 No. 142), File E143289; cURus-recognized (UL 60950, CSA C22.2 No. 60950), File E151273	cULus-listed (UL 508, CSA C22.2 No. 142), File E179336
FM approval	–	–	–
Marine type approval	–	–	–
Degree of protection (EN 60529)	IP20	IP20	IP20
EMC			
Emitted interference	EN 55022 Class B	EN 55022 Class B	EN 55022 Class B
Supply-harmonics limitation	Not applicable	Not applicable	Not applicable
Noise immunity	EN 61000-6-2	EN 61000-6-2	EN 61000-6-2
Operating data			
Ambient temperature range	– 25 ... + 70 °C with natural convection	– 25 ... + 70 °C with natural convection, derating from 60 °C	0 ... + 70 °C with natural convection
Transport/storage temperature range	– 40 ... + 70 °C	– 40 ... + 70 °C	– 40 ... + 70 °C
Humidity class	Climate class 3K3 to EN 60721, no condensation	Climate class 3K3 to EN 60721, no condensation	Climate class 3K3 to EN 60721, no condensation
Mechanics			
Connections			
• Supply input L, N, PE (DC input: L+1, M1, PE)	One screw terminal each for 0.5 ... 2.5 mm^2 single-core/ finely stranded	One screw terminal each for 0.5 ... 2.5 mm^2 single-core/ finely stranded	One screw terminal each for 2 x 0.5 ... 2.5/1.5 mm^2 single-core/finely stranded
• Output +	1 screw terminal for 0.5 ... 2.5 mm^2	1 screw terminal for 0.5 ... 2.5 mm^2	1 screw terminal for 2 x 0.5 ... 2.5 mm^2
• Output –	2 screw terminals for 0.5 ... 2.5 mm^2	2 screw terminals for 0.5 ... 2.5 mm^2	1 screw terminal for 2 x 0.5 ... 2.5 mm^2
Dimensions (W x H x D) in mm	22.5 x 80 x 91	22.5 x 80 x 91	80 x 135 x 120
Weight, approx.	0.11 kg	0.14 kg	0.5 kg
Installation	Snaps onto DIN rail EN 60715 35x7.5/15	Snaps onto DIN rail EN 60715 35x7.5/15	Snaps onto DIN rail EN 60715 35x15 Snap-on
Accessories	–	–	–

The S7-300 version	The outdoor version
2 A	**2 A**
6ES7 307-1BA00-0AA0	**6ES7 305-1BA80-0AA0**
Approx. 83 %	Approx. 75 %
Approx. 10 W	Approx. 16 W (24 W)
Typ. ±0.3 % V_{out}	Typ. ±0.3 % V_{out}
Typ. ±0.8 % V_{out}	Typ. ±2.5 % V_{out}
< 5 ms (typ. 2.5 ms) < 5 ms (typ. 2.5 ms)	< 5 ms (typ. 2.5 ms) < 5 ms (typ. 2.5 ms)
Additional control loop, shutdown at approx. 30 V, automatic restart 2,2 ... 2.6 A	Additional control loop, shutdown at approx. 30 V, automatic restart 3,3 ... 3.9 A
Electronic shutdown, automatic restart < 4 A	Electronic shutdown, automatic restart < 2 A
–	–
Yes, safety extra-low output voltage V_{out} according to EN 60950 and EN 50178	Yes, safety extra-low output voltage V_{out} according to EN 60950 and EN 50178, creepage distances and clearances > 5 mm
Class I < 3.5 mA (typ. 0.7 mA)	Class I < 3.5 mA (typ. 0.7 mA)
Yes	Yes
Yes UL-listed (UL 508), File E143289, CSA (CSA C22.2 No. 14)	Yes UL-listed (UL 508), File E143289, CSA (CSA C22.2 No. 14)
Class I Div. 2 Group A, B, C, D T4 in S7-300 system IP20	– GL IP20
EN 55022 Class B Not applicable EN 61000-6-2	EN 55011 Class A Not applicable EN 61000-6-2
0 ... +60 °C with natural convection	–25 ... +70 °C with natural convection
–40 ... +85 °C Climate class 3K3 to EN 60721, no condensation	–40 ... +85 °C Climate class 3K5 to EN 60721, transient condensation permitted
One screw terminal each for 0.5 ... 2.5 mm² single-core/ finely stranded 2 screw terminals for 0.5 ... 2.5 mm² 2 screw terminals for 0.5 ... 2.5 mm²	One screw terminal each for 0.5 ... 2.5 mm² single-core/ finely stranded 3 screw terminals for 0.5 ... 2.5 mm² 3 screw terminals for 0.5 ... 2.5 mm²
50 x 125 x 120 0.42 kg Snaps onto S7 rail	80 x 125 x 120 0.75 kg Snaps onto S7 rail
Mounting adapter for DIN rail (6ES7390-6BA00-0AA0) and PS-CPU (6ES7390-7BA00-0AA0) connection comb	Mounting adapter for DIN rail and PS-CPU connection comb

Notes

SITOP 24 V
Single-phase

3

SITOP 24 V
Single-phase

Output currents 2.5 to 4 A

3

Overview

SITOP smart

The universal types

Application

The single-phase power supply for universal use; complies with EU Directive 94/9/EEC (ATEX 100a); slim design; 50 % extra power for 5 s and 120 % rated power up to 45 °C.

The universal power supplies for all supply networks, with a wide-range input from 93 to 264 V AC and 110 to 350 V DC for supply from all typical networks.

Technical specifications

Power supply, type	**2.5 A**	**2.5 A**	**4 A**
Order No.	**6EP1 332-2BA10**	**6EP1 332-1SH12**	**6EP1 332-1SH22**
Input			
Rated voltage $V_{in\ rated}$	Single-phase AC **120/230 V AC** set by means of selector switch	Single-phase AC or DC **120 - 230 V AC** wide-range input	Single-phase AC or DC **120 - 230 V AC** wide-range input
Voltage range	85 ... 132 V/170 ... 264 V AC	93 ... 264 V AC or 110 ... 350 V DC	93 ... 264 V AC or 110 ... 350 V DC
Overvoltage strength	2.3 x $V_{in\ rated}$, 1.3 ms	2.3 x $V_{in\ rated}$, 1.3 ms	2.3 x $V_{in\ rated}$, 1.3 ms
Mains buffering at $I_{out\ rated}$	> 20 ms at V_{in} = 93/187 V	> 20 ms at V_{in} = 120 V, > 80 ms (typ. 100 ms) at V_{in} = 187 V	> 20 ms at V_{in} = 120 V, >80 ms (typ. 100 ms) at V_{in} = 187 V
Rated line frequency; rated line-frequency range	50/60 Hz, 47 ... 63 Hz	0/50/60 Hz, 47 ... 63 Hz	0/50/60 Hz, 47 ... 63 Hz
Rated current $I_{in\ rated}$	1.1/0.65 A	1.3 - 0.7 A	1.8 - 1.1 A
Switch-on current limit (+ 25 °C)	< 27 A, typ. 3 ms	< 33 A, < 3 ms (V_{in} = 230 V)	< 33 A, < 3 ms (V_{in} = 230 V)
I^2t	< 0.3 A^2s	< 3.5 A^2s	< 3.5 A^2s
Built-in line-side fuse	T 2 A/250 V (not accessible)	T 3.15 A (not accessible)	T 3.15 A (not accessible)
Recommended miniature circuit breaker (IEC 898) in the mains power input	From 3 A, Characteristic C	Two-pole circuit breaker from 10 A, Characteristic C, or from 6 A, Characteristic D	Two-pole circuit breaker from 10 A, Characteristic C, or from 6 A, Characteristic D
Output	Controlled, isolated DC voltage	Controlled, isolated DC voltage	Controlled, isolated DC voltage
Rated voltage $V_{out\ rated}$	**24 V DC**	**24 V DC**	**24 V DC**
Total tolerance	± 3 %	± 1 %	± 1 %
• Static mains compensation	Approx. 0.1 %	Approx. 0.1 %	Approx. 0.1 %
• Static load smoothing	Approx. 0.5 %	Approx. 0.2 %	Approx. 0.2 %
Residual ripple	< 150 mV_{pp} (typ. 10 mV_{pp})	< 50 mV_{pp} (typ. 40 mV_{pp})	< 50 mV_{pp} (typ. 40 mV_{pp})
Spikes (bandwidth: 20 MHz)	< 240 mV_{pp} (typ. 50 mV_{pp})	< 100 mV_{pp} (typ. 40 mV_{pp})	< 100 mV_{pp} (typ. 40 mV_{pp})
Adjustment range	22.8 ... 28.0 V	–	–
Status display	Green LED for 24 V OK	Green LED for 24 V OK	Green LED for 24 V OK
Response on activation/deactivation	Overshoot of V_{out} approx. 4 %	No overshoot of V_{out} (soft start)	No overshoot of V_{out} (soft start)
Startup delay/voltage rise	< 0.1 s at 230 V AC/typ. 50 ms	< 0.6 s/typ. 20 ms	< 0.6 s/typ. 20 ms
Rated current $I_{out\ rated}$	**2.5 A**	**2.5 A**	**4 A**
Current range			
• Up to + 45 °C	0 ... 3 A	0 ... 2.5 A	0 ... 4 A
• Up to + 60 °C	0 ... 2.5 A	0 ... 2.5 A	0 ... 2.5 A
Dynamic overcurrent on			
• Power-up on short-circuit	Typ. 7 A for 100 ms	Approx. 2.8 A constant current	Approx. 4.4 A constant current
• Short-circuit during operation	Typ. 7 A for 200 ms	Approx. 2.8 A constant current	Approx. 4.4 A constant current
Parallel switching for enhanced performance	Yes, 2 units	Yes, up to 10 units	Yes, up to 10 units

Continued on page 3/4.

The S7-200 type	The Class2 version
	
Optimally matched in design and functionality to the SIMATIC S7-200 micro PLC; flat design, particularly suitable for low cabinet depths.	The Class2 version with output limited to 100 W maximum.

	3.5 A	**3.7 A**
	6EP1 332-1SH31[1]	**6EP1 332-2BA00**
	Single-phase AC **120/230 V AC** Set via wire jumper 93 ... 132 V/187 ... 264 V AC	Single-phase AC **120/230 V AC** Set via wire jumper 93 ... 132 V/187 ... 264 V AC
	2.3 x $V_{n\ rated}$, 1.3 ms	2.3 x $V_{in\ rated}$, 1.3 ms
	> 20 ms at V_{in} = 187 V	> 10 ms at V_{in} = 93/187 V
	50/60 Hz, 47 ... 63 Hz	50/60 Hz, 47 ... 63 Hz
	1.65/0.95 A < 33 A, < 3 ms (V_{in} = 230 V)	1.8/0.7 A < 32 A, typ. 3 ms (V_e = 230 V)
	< 1.0 A^2s T 2.5 A/250 V (not accessible) Two-pole miniature circuit breaker from 10 A, Characteristic C or from 6 A, Characteristic D	< 0.8 A^2s T 3.15 A/250 V (not accessible) From 6 A, Characteristic C
	Controlled, isolated DC voltage **24 V DC** ±5 % (typ. ±2 %) Approx. 0.1 % Approx. 0.2 %	Controlled, isolated DC voltage **24 V DC** ±3 % Approx. 0.1 % Approx. 0.2 %
	< 150 mV_{pp} (typ. 30 mV_{pp}) < 240 mV_{pp} (typ. 110 mV_{pp}) – – No overshoot of V_{out} (soft start)	< 150 mV_{pp} < 240 mV_{pp} 22.8 ... 26.4 V[2] Green LED for 24 V OK No overshoot of V_{out} (soft start)
	< 1 s/typ. 80 ms **3.5 A** 0 ... 3.5 A 0 ... 3.5 A	< 3 s/typ. 80 ms **3.7 A** 0 ... 3.7 A 0 ... 3.7 A
	Typ. 5 A for 100 ms Typ. 5 A for 100 ms Yes, up to 5 units	Yes, up to 2 units[2]

Continued on Page 3/5.

[1] SIPLUS module 6AG1 203-1SH31-2AA0 for extended temperature range –25 °C to +70 °C and use under medial load (e.g. chlorine sulfur atmosphere).

[2] Only permissible at ambient temperature 0 °C to +50 °C.

Output currents 2.5 to 4 A

	SITOP smart	The universal types	The universal types
Power supply, type	**2.5 A**	**2.5 A**	**4 A**
Order No.	**6EP1 332-2BA10**	**6EP1 332-1SH12**	**6EP1 332-1SH22**
Efficiency			
Efficiency at $V_{out\ rated}$, $I_{out\ rated}$	Approx. 85 %	Approx. 85 %	Approx. 85 %
Power loss at $V_{out\ rated}$, $I_{out\ rated}$	Approx. 9 W	Approx. 11 W	Approx. 17 W
Closed-loop control			
Dyn. mains compensation ($V_{in\ rated}$ ± 15 %)	Typ. ± 0.3 % V_{out}	Typ. ± 0.3 % V_{out}	Typ. ± 0.3 % V_{out}
Dynamic load smoothing (I_{out}: 50/100/50 %)	Typ. ± 1 % V_{out}	Typ. ± 0.5 % V_{out}	Typ. ± 0.5 % V_{out}
Load step settling time			
• 50 to 100 %	Typ. 0.2 ms	< 2 ms (typ. 1 ms)	< 2 ms (typ. 1 ms)
• 100 to 50 %	Typ. 0.2 ms	< 2 ms (typ. 1 ms)	< 2 ms (typ. 1 ms)
Protection and monitoring			
Output overvoltage protection	< 33 V	Yes, acc. to EN 60950	Yes, acc. to EN 60950
Current limit	Typ. 3.2 ... 3.4 A, overload capability 150 % $I_{out\ rated}$ up to 5 s/min	2.8 A	4.4 A
Short-circuit protection	Constant current characteristic	Constant current characteristic to 0 V	Constant current characteristic to 0 V
Sustained short-circuit current rms value	Approx. 5 A	< 3 A	< 5 A
Overload/short-circuit indicator	–	–	–
Safety			
Primary/secondary electrical isolation	Yes, safety extra-low output voltage V_{out} to EN 60950 and EN 50178	Yes, safety extra-low output voltage V_{out} to EN 60950	Yes, safety extra-low output voltage V_{out} to EN 60950
Protection class	Class I	Class I	Class I
Leakage current	< 3.5 mA (typ. 0.4 mA)	< 3.5 mA	< 3.5 mA
German Technical Inspectorate approval	Notified Body (CB Scheme)	Yes	Yes
CE marking	Yes	Yes	Yes
UL/cUL (CSA) approval	cULus-listed (UL 508, CSA C22.2 No. 14), File E197259, cCSAus (CSA C22.2 No. 60950-1, UL 60950-1)	cULus-listed (UL 508, CSA C22.2 No. 142), File E143289	cULus-listed (UL 508, CSA C22.2 No. 142), File E143289
Explosion protection	ATEX EX II 3G EEx nA II T4 U; UL 1604	–	–
Marine type approval	GL	–	–
Degree of protection (EN 60529)	IP20	IP20	IP20
EMC			
Emitted interference	EN 55022 Class B	EN 55022 Class B	EN 55022 Class B
Supply-harmonics limitation	Not applicable	Not applicable	EN 61000-3-2
Noise immunity	EN 61000-6-2	EN 61000-6-2	EN 61000-6-2
Operating data			
Ambient temperature range	0 ... + 60 °C with natural convection	0 ... + 60 °C with natural convection	0 ... + 50 °C with natural convection
Transport/storage temperature range	– 40 ... + 85 °C	– 25 ... + 85 °C	– 25 ... + 85 °C
Humidity class	Climate class 3K3 to EN 60721, no condensation	Climate class 3K3 to EN 60721, no condensation	Climate class 3K3 to EN 60721, no condensation
Mechanics			
Connections			
• Supply input L, N, PE	One screw terminal each for 0.5 ... 2.5 mm² single-core/ finely stranded	One screw terminal each for 2 x 0.5 ... 1.5 mm² finely stranded, 2 x 0.5 ... 2.5 mm² single-core	One screw terminal each for 2 x 0.5 ... 1.5 mm² finely stranded, 2 x 0.5 ... 2.5 mm² single-core
• Output +	2 screw terminals for 0.5 ... 2.5 mm²	1 screw terminal for 2 x 0.5 ... 2.5 mm²	1 screw terminal for 2 x 0.5 ... 2.5 mm²
• Output –	2 screw terminals for 0.5 ... 2.5 mm²	1 screw terminal for 2 x 0.5 ... 2.5 mm²	1 screw terminal for 2 x 0.5 ... 2.5 mm²
Dimensions (W x H x D) in mm	32.5 x 125 x 125	80 x 135 x 120	80 x 135 x 120
Weight, approx.	0.32 kg	0.5 kg	0.5 kg
Installation	Snaps onto DIN rail EN 60715 35x7.5/15	Snaps onto DIN rail EN 60715 35x15, wall mounting	Snaps onto DIN rail EN 60715 35x15, wall mounting
Accessories	–	–	–

The S7-200 type	The Class2 version
3.5 A	**3.7 A**
6EP1 332-1SH31	**6EP1 332-2BA00**
Approx. 84 %	> 80 %
Approx. 16 W	Approx. 22 W
Typ. ± 0.3 % V_{out}	Typ. ±0.3 % V_{out}
Typ. ±3 % V_{out}	Typ. ±2.5 % V_{out}
< 5 ms < 5 ms	Typ. 0.2 ms Typ. 0.2 ms
Yes, acc. to EN 60950 3.8 A	Yes, acc. to EN 60950 Typ. 3.8 ... 4.1 A
Constant current characteristic up to typ. 14 V, electronic shut-down below that, automatic restart < 4 A –	Electronic shutdown, automatic restart – –
Yes, safety extra-low output voltage V_{out} according to EN 60950 Class I < 3.5 mA	Yes, safety extra-low output voltage V_{out} according to EN 60950 Class I < 3.5 mA (typ. 0.4 mA)
Yes Yes cULus-listed (UL 508, CSA C22.2 No. 142), File E143289	Yes; CB scheme Yes cULus-listed (UL 508, CSA C22.2 No. 142), File E143289; cURus-recognized (UL 1950, CSA C22.2 No. 60950), File E151273; UL 1310
– – IP20	– – IP20
EN 55022 Class B EN 61000-3-2 EN 61000-6-2	EN 55022 Class B EN 61000-3-2 EN 61000-6-2
0 ... + 60 °C with natural convection	0 ... + 60 °C with natural convection
– 25 ... + 85 °C Climate class 3K3 to EN 60721, no condensation	– 25 ... + 85 °C Climate class 3K3 to EN 60721, no condensation
One screw terminal each for 0.5 ... 1.5 mm² single-core/ finely stranded 1 screw terminal for 0.5 ... 1 mm² 2 screw terminals for 0.5 ... 1 mm²	One screw terminal each for 0.5 ... 2.5 mm² finely stranded 1 screw terminal for 0.5 ... 2.5 mm² 2 screw terminals for 0.5 ... 2.5 mm²
160 x 80 x 62 0.5 kg Snaps onto DIN rail EN 60715 35x7.5/15 wall mounting	75 x 125 x 125 0.75 kg Snaps onto DIN rail EN 60715 35x7.5/15
Mounting bracket (6EP1971-1AA01)	–

Notes

SITOP 24 V
Single-phase and two-phase

4

SITOP 24 V
Single-phase and two-phase

Output current 5 A

4

Overview

SITOP modular

SITOP smart

Application

Modular power supply with single-phase and two-phase wide-range inputs for global use; with selectable output characteristic; functional expansion possible using add-on modules

The single-phase power supply for universal use; conformity with EU Directive 94/9/EEC (ATEX 100a); slim design; 50 % extra power for 5 s and 120 % rated power up to 45 °C; without limiting supply harmonics in accordance with EN 61000-3-2 with 6EP1333-2AA01.

Technical specifications

Power supply, type	**5 A**	**5 A**	**5 A**
Order No.	**6EP1 333-3BA00**	**6EP1 333-2AA01**	**6EP1 333-2BA01**
Input			
Rated voltage $V_{in\ rated}$	Single-phase and two-phase AC **120-230/230-500 V AC** Set by means of selector switch on device	Single-phase AC **120/230 V AC** Set by means of selector switch on device	Single-phase AC **120/230 V AC** Set by means of selector switch on device
Voltage range	85 ... 264 V/176 ... 500 V AC	85 ... 132 V/170 ... 264 V AC	85 ... 132 V/170 ... 264 V AC
Overvoltage resistance	1300 V_{peak}, 1.3 ms	2.3 x $V_{in\ rated}$, 1.3 ms	2.3 x $V_{in\ rated}$, 1.3 ms
Mains buffering at $I_{out\ rated}$	> 25 ms at V_{in} = 120/230 V	> 20 ms at V_{in} = 93/187 V	> 20 ms at V_{in} = 93/187 V
Rated line frequency; rated line-frequency range	50/60 Hz, 47 ... 63 Hz	50/60 Hz, 47 ... 63 Hz	50/60 Hz, 47 ... 63 Hz
Rated current $I_{in\ rated}$	2.2-1.2/1.2-0.61 A	2.1/1.15 A	2.1/1.15 A
Switch-on current limit (+ 25 °C)	< 35 A	< 32 A, typ. 3 ms	< 32 A, typ. 3 ms
I^2t	< 1.7 A^2s	< 0.8 A^2s	< 0.8 A^2s
Built-in line-side fuse	T 3,15 A (not accessible)	T 3,15 A/250 V (not accessible)	T 3,15 A/250 V (not accessible)
Recommended miniature circuit breaker (IEC 898) in the mains power input	From 6 A (10 A) Characteristic C (B); with two-phase operation: miniature circuit breaker with two-pole connection or motor circuit breaker 3RV1021-1EA10	From 6 A, Characteristic C	From 6 A, Characteristic C
Output	Controlled, isolated DC voltage	Controlled, isolated DC voltage	Controlled, isolated DC voltage
Rated voltage $V_{out\ rated}$	**24 V DC**	**24 V DC**	**24 V DC**
Total tolerance	±3 %	±3 %	±3 %
• Static mains compensation	Approx. 0.1 %	Approx. 0.1 %	Approx. 0.1 %
• Static load smoothing	Approx. 0.1 %	Approx. 0.5 %	Approx. 0.5 %
Residual ripple	< 50 mV_{pp}	< 150 mV_{pp} (typ. 50 mV_{pp})	< 150 mV_{pp} (typ. 50 mV_{pp})
Spikes (bandwidth: 20 MHz)	< 200 mV_{pp}	< 240 mV_{pp} (typ. 150 mV_{pp})	< 240 mV_{pp} (typ. 150 mV_{pp})
Adjustment range	24 ... 28.8 V (max. 120 W)	22,8 ... 28 V	22,8 ... 28 V
Status display	Green LED for 24 V OK	Green LED for 24 V OK	Green LED for 24 V OK
Response on activation/deactivation	Overshoot of V_{out} approx. 3 %	Overshoot of V_{out} approx. 4 %	Overshoot of V_{out} approx. 4 %
Startup delay/voltage rise	< 1 s/< 50 ms	< 0.1 s at 230 V AC/typ. 50 ms	< 0.1 s at 230 V AC/typ. 50 ms
Rated current $I_{out\ rated}$	**5 A**	**5 A**	**5 A**
Current range			
• Up to + 45 °C	0 ... 5 A	0 ... 6 A	0 ... 6 A
• Up to + 60 °C	0 ... 5 A	0 ... 5 A	0 ... 5 A
Dynamic overcurrent on			
• Power-up on short-circuit	Approx. 5.5 A constant current	Typ. 17 A for 100 ms	Typ. 17 A for 100 ms
• Short-circuit during operation	Typ. 15 A for 25 ms	Typ. 17 A for 200 ms	Typ. 17 A for 200 ms
Parallel switching for enhanced performance	Yes, 2 units (switchable characteristic)	Yes, 2 units	Yes, 2 units

Continued on page 4/4.

The S7-300 version	The outdoor version	The flat design
		
The field-proven power supply in SIMATIC S7-300 design; with PS-CPU connecting comb and for snap-mounting on S7 rail.	The power supply unit for extreme environmental conditions in SIMATIC S7-300 design; can be snapped onto S7 rail; with PS-CPU connecting comb.	The flat design which is of great advantage where only low mounting depths are available, e.g. for use with distributed I/O, in machine benches or alcoves; design matched to SIMATIC ET 200B.
5 A	**5 A**	**5 A**
6ES7 307-1EA00-0AA0	**6ES7 307-1EA80-0AA0**[1]	**6EP1 333-1AL12**
Single-phase AC **120/230 V AC** Set by means of selector switch on device 85 ... 132 V/170 ... 264 V AC	Single-phase AC **120/230 V AC** Set by means of selector switch on device 93 ... 132 V/187 ... 264 V AC	Single-phase AC **120/230 V AC** Set by means of selector switch on device 85 ... 132 V/170 ... 264 V AC
2.3 x $V_{in\ rated}$, 1.3 ms	2.3 x $V_{in\ rated}$, 1.3 ms	2.3 x $V_{in\ rated}$, 1.3 ms
> 20 ms at V_{in} = 93/187 V 50/60 Hz, 47 ... 63 Hz	> 20 ms at V_{in} = 93/187 V 50/60 Hz, 47 ... 63 Hz	> 20 ms at V_{in} = 93/187 V 50/60 Hz, 47 ... 63 Hz
2.1/1.3 A < 45 A, < 3 ms	2.1/1.2 A < 45 A, < 3 ms	2.2/1.2 A < 32 A, < 3 ms
< 1.2 A^2s F 4 A/250 V (not accessible) From 6 A, Characteristic C	< 1.8 A^2s (typ. 1.2 A^2s) T 3,15 A/250 V (not accessible) From 10 A, Characteristic C or from 6 A, Characteristic D	< 0.8 A^2s T 3,15 A/250 V (not accessible) From 6 A, Characteristic C
Controlled, isolated DC voltage **24 V DC** ±3 % Approx. 0.1 % Approx. 0.2 %	Controlled, isolated DC voltage **24 V DC** ±3 % Approx. 0.2 % Approx. 0.4 %	Controlled, isolated DC voltage **24 V DC** ±1 % Approx. 0.1 % Approx. 0.5 %
< 150 mV_{pp} (typ. 40 mV_{pp}) < 240 mV_{pp} (typ. 90 mV_{pp}) – Green LED for 24 V OK No overshoot of V_{out} (soft start)	< 150 mV_{pp} (typ. 40 mV_{pp}) < 240 mV_{pp} (typ. 90 mV_{pp}) – Green LED for 24 V OK No overshoot of V_{out} (soft start)	< 150 mV_{pp} (typ. 40 mV_{pp}) < 240 mV_{pp} (typ. 100 mV_{pp}) 22 ... 29 V Green LED for 24 V OK No overshoot of V_{out} (soft start)
< 2 s/typ. 60 ms **5 A**	< 3 s/typ. 100 ms **5 A**	< 2 s/typ. 40 ms **5 A**
0 ... 5 A 0 ... 5 A	0 ... 5 A 0 ... 5 A	0 ... 5 A 0 ... 5 A
Typ. 20 A for 75 ms Typ. 20 A for 75 ms Not permissible	Typ. 20 A for 180 ms Typ. 20 A for 80 ms Not permissible	Typ. 20 A for 500 ms Typ. 20 A for 500 ms Yes, 2 units

Continued on page 4/5.

[1] SIPLUS module 6AG1 307-1EA80-2AA0 for temperature range –25 °C to +60 °C and use under medial load (e.g. chlorine sulfur atmosphere). This SIPLUS power supply conforms with standards for electronic equipment used on rolling stock (EN 50155, temperature T1, category 1).

SITOP 24 V
Single-phase and two-phase

Output current 5 A

	SITOP modular	SITOP smart	SITOP smart
Power supply, type	**5 A**	**5 A**	**5 A**
Order No.	**6EP1 333-3BA00**	**6EP1 333-2AA01**	**6EP1 333-2BA01**
Efficiency			
Efficiency at $V_{out\ rated}$, $I_{out\ rated}$	Approx. 87 %	Approx. 87 %	Approx. 87 %
Power loss at $V_{out\ rated}$, $I_{out\ rated}$	Approx. 18 W	Approx. 17 W	Approx. 17 W
Closed-loop control			
Dyn. mains compensation ($V_{in\ rated}$ ± 15 %)	Typ. ± 0.1 % V_{out}	Typ. ± 0.3 % V_{out}	Typ. ± 0.3 % V_{out}
Dynamic load smoothing (I_{out}: 50/100/50 %)	Typ. + 3 % V_{out}	Typ. ± 1 % V_{out}	Typ. ± 1 % V_{out}
Load step settling time			
• 50 at 100 %	< 5 ms (typ. 2 ms)	Typ. 0.2 ms	Typ. 0.2 ms
• 100 at 50 %	< 5 ms (typ. 2 ms)	Typ. 0.2 ms	Typ. 0.2 ms
Protection and monitoring			
Output overvoltage protection	< 35 V	< 33 V	< 33 V
Current limit	Typ. 5.5 A	Typ. 6.4 ... 6.6 A, overload capab. 150 % $I_{out\ rated}$ up to 5 s/min	Typ. 6.4 ... 6.6 A, overload capab. 150 % $I_{out\ rated}$ up to 5 s/min
Short-circuit protection	Optional constant current characteristic approx. 5.5 A or latching shutdown	Constant current characteristic	Constant current characteristic
Sustained short-circuit current rms val.	Approx. 5.5 A	Approx. 10 A	Approx. 10 A
Overload/short-circuit indicator	Yellow LED for "overload", red LED for "latching shutdown"	–	–
Safety			
Primary/secondary electrical isolation	Yes, safety extra-low output voltage V_{out} to EN 60950 and EN 50178	Yes, safety extra-low output voltage V_{out} to EN 60950 and EN 50178	Yes, safety extra-low output voltage V_{out} to EN 60950 and EN 50178
Protection class	Class I	Class I	Class I
Leakage current	< 3.5 mA (typ. 0.25 mA)	< 3.5 mA (typ. 0.4 mA)	< 3.5 mA (typ. 0.4 mA)
German Technical Inspectorate approv.	Yes	Notified Body (CB Scheme)	Notified Body (CB Scheme)
CE mark	Yes	Yes	Yes
UL/cUL (CSA) approval	cULus-listed (UL 508, CSA C22.2 No. 14), File E197259	cULus-listed (UL 508, CSA C22.2 No. 14), File E197259, cCSAus (CSA C22.2 No. 60950-1, UL 60950-1)	cULus-listed (UL 508, CSA C22.2 No. 14), File E197259, cCSAus (CSA C22.2 No. 60950-1, UL 60950-1)
Explosion protection	–	ATEX EX II 3G EEx nA II T4 U; UL 1604	ATEX EX II 3G EEx nA II T4 U; UL 1604
FM approval	–	–	–
Marine approval	–	GL	GL
Degree of protection (EN 60529)	IP20	IP20	IP20
EMC			
Emitted interference	EN 55022 Class B	EN 55022 Class B	EN 55022 Class B
Supply-harmonics limitation	EN 61000-3-2	–	EN 61000-3-2
Noise immunity	EN 61000-6-2	EN 61000-6-2	EN 61000-6-2
Operating data			
Ambient temperature range	0 ... + 60 °C with natural convection	0 ... + 60 °C with natural convection	0 ... + 60 °C with natural convection
Transport/storage temperature range	– 25 ... + 85 °C	– 40 ... + 85 °C	– 40 ... + 85 °C
Humidity class	Climate class 3K3 to EN 60721, no condensation	Climate class 3K3 to EN 60721, no condensation	Climate class 3K3 to EN 60721, no condensation
Mechanics			
Connections			
• Supply input L, N, PE	One screw terminal each for 0.2 ... 2.5 mm² single-core/ finely stranded	One screw terminal each for 0.5 ... 2.5 mm² single-core/ finely stranded	One screw terminal each for 0.5 ... 2.5 mm² single-core/ finely stranded
• Output +	2 screw terminals for 0.2 ... 2.5 mm²	2 screw terminals for 0.5 ... 2.5 mm²	2 screw terminals for 0.5 ... 2.5 mm²
• Output –	2 screw terminals for 0.2 ... 2.5 mm²	2 screw terminals for 0.5 ... 2.5 mm²	2 screw terminals for 0.5 ... 2.5 mm²
Dimensions (W x H x D) in mm	70 x 125 x 125	50 x 125 x 125	50 x 125 x 125
Weight, approx.	1.2 kg	0.5 kg	0.5 kg
Installation	Snaps onto DIN rail EN 60715 35x7.5/15	Snaps onto DIN rail EN 60715 35x7.5/15	Snaps onto DIN rail EN 60715 35x7.5/15
Accessories	Buffer module (6EP1961-3BA00) Signaling module (6EP1961-3BA10) Redundancy module (6EP1961-3BA20)	–	–

The S7-300 version	The outdoor version	The flat design
5 A	**5 A**	**5 A**
6ES7 307-1EA00-0AA0	**6ES7 307-1EA80-0AA0**	**6EP1 333-1AL12**
Approx. 87 %	Approx. 84 %	Approx. 88 %
Approx. 18 W	Approx. 23 W	Approx. 17 W
Typ. ±0.3 % V_{out}	Typ. ±0.3 % V_{out}	Typ. ±0.3 % V_{out}
Typ. ±2.5 % V_{out}	Typ. ±3 % V_{out}	Typ. ±0.5 % V_{out}
Typ. 0.1 ms	< 5 ms (typ. 0.2 ms)	< 5 ms (typ. 0.1 ms)
Typ. 0.1 ms	< 5 ms (typ. 0.2 ms)	< 5 ms (typ. 0.1 ms)
Additional control loop, shutdown at approx. 30 V, automatic restart 5.5 ... 6.5 A	Additional control loop, shutdown at approx. 30 V, automatic restart 5.5 ... 6.5 A	Additional control loop, shutdown at approx. 33 V, automatic restart 5.5 ... 6.5 A
Electronic shutdown, automatic restart	Electronic shutdown, automatic restart	Electronic shutdown, automatic restart
< 9 A	< 5 A	< 5 A
–	–	–
Yes, safety extra-low output voltage V_{out} to EN 60950 and EN 50178	Yes, safety extra-low output voltage V_{out} to EN 60950 and EN 50178, creepage distances and clearances >8 mm	Yes, safety extra-low output voltage V_{out} to EN 60950 and EN 50178
Class I	Class I	Class I
< 3.5 mA (typ. 0.3 mA)	< 3.5 mA (typ. 0.3 mA)	< 3.5 mA (typ. 0.26 mA)
Yes	Yes	Yes
Yes	Yes	Yes
UL-listed (UL 508) File E143289, CSA (CSA C22.2 No. 14)	UL-listed (UL 508) File E143289, CSA (CSA C22.2 No. 14)	cULus-listed (UL 508, CSA C22.2 No. 14), File E197259
–	–	–
Class I Div. 2 Group A, B, C, D, T 4 in S7-300 system	–	–
IP20	GL	–
	IP20	IP20
EN 55022 Class B	EN 55011 Class A	EN 55022 Class B
EN 61000-3-2	–	–
EN 61000-6-2	EN 61000-6-2	EN 61000-6-2
0 ... + 60 °C with natural convection	– 25 ... + 70 °C with natural convection	0 ... + 60 °C with natural convection
– 40 ... + 85 °C Climate class 3K3 to EN 60721, no condensation	– 40 ... + 85 °C Climate class 3K5 to EN 60721, transient condensation permitted	– 25 ... + 85 °C Climate class 3K3 to EN 60721, no condensation
One screw terminal each for 0.5 ... 2.5 mm^2 single-core/ finely stranded	One screw terminal each for 0.5 ... 2.5 mm^2 single-core/ finely stranded	One screw terminal each for 0.5 ... 2.5 mm^2 single-core/ finely stranded
3 screw terminals for 0.5 ... 2.5 mm^2	3 screw terminals for 0.5 ... 2.5 mm^2	3 screw terminals for 0.5 ... 2.5 mm^2
3 screw terminals for 0.5 ... 2.5 mm^2	3 screw terminals for 0.5 ... 2.5 mm^2	3 screw terminals for 0.5 ... 2.5 mm^2
80 x 125 x 120	80 x 125 x 120	160 x 130 x 60
0.74 kg	0.57 kg	0.6 kg
Snaps onto S7 rail	Snaps onto S7 rail	Snaps onto DIN rail EN 60715 35x7.5/15
Mounting adapter for DIN rail (6ES7390-6BA00-0AA0) and connection comb (6ES7390-7BA00-0AA0)	Mounting adapter for DIN rail (6ES7390-6BA00-0AA0) and connection comb (6ES7390-7BA00-0AA0)	Mounting bracket (6EP1971-1AA01)

Notes

SITOP 24 V
Single-phase and two-phase

5

SITOP 24 V
Single-phase and two-phase

Output current 10 A

Overview

SITOP modular

SITOP smart

Application

Modular power supply with single-phase and two-phase wide-range inputs for global use; with selectable output characteristic; functional expansion possible using add-on modules

The single-phase power supply for universal use; complies with EU Directive 94/9/EEC (ATEX 100a); slim design; 50 % extra power for 5 s and 120 % rated power to 45 °C; without limiting supply harmonics in accordance with EN 61000-3-2 with 6EP1334-2AA01.

5

Technical specifications

Power supply, type	**10 A**	**10 A**	**10 A**
Order No.	**6EP1 334-3BA00**[1)]	**6EP1 334-2AA01**	**6EP1 334-2BA01**[2)]
Input			
Rated voltage $V_{in\ rated}$	Single-phase and two-phase AC **120-230/230-500 V AC** Set by means of selector switch on device	Single-phase AC **120/230 V AC** Set by means of selector switch on device	Single-phase AC **120/230 V AC** Set by means of selector switch on device
Voltage range	85 ... 264 V/176 ... 550 V AC	85 ... 132 V/170 ... 264 V AC	85 ... 132 V/170 ... 264 V AC
Overvoltage resistance	1300 V_{peak}, 1.3 ms	2.3 x $V_{in\ rated}$, 1.3 ms	2.3 x $V_{in\ rated}$, 1.3 ms
Mains buffering at $I_{out\ rated}$	> 25 ms at V_{in} = 120/230 V	> 20 ms at V_{in} = 93/187 V	> 20 ms at V_{in} = 93/187 V
Rated line frequency; rated line-frequency range	50/60 Hz, 47 ... 63 Hz	50/60 Hz, 47 ... 63 Hz	50/60 Hz, 47 ... 63 Hz
Rated current $I_{in\ rated}$	4.4-2.4/2.4-1.1 A	4.1/2.4 A	4.1/2.0 A
Switch-on current limit (+ 25 °C)	< 35 A	< 65 A, typ. 3 ms	< 65 A, typ. 3 ms
I^2t	< 4.0 A^2s	< 3.3 A^2s	< 3.3 A^2s
Built-in line-side fuse	T 6.3 A (not accessible)	T 6.3 A/250 V (not accessible)	T 6.3 A/250 V (not accessible)
Recommended miniature circuit breaker (IEC 898) in the mains power input	From 6 A (10 A) Characteristic C (B); with two-phase operation: miniature circuit breaker with two-pole connection or motor circuit breaker 3RV1021-1EA10	From 10 A, Characteristic C	From 10 A, Characteristic C
Output			
Rated voltage $V_{out\ rated}$	Controlled, isolated DC voltage **24 V DC**	Controlled, isolated DC voltage **24 V DC**	Controlled, isolated DC voltage **24 V DC**
Total tolerance	±3 %	±3 %	±3 %
• Static mains compensation	Approx. 0.1 %	Approx. 0.1 %	Approx. 0.1 %
• Static load smoothing	Approx. 0.1 %	Approx. 0.5 %	Approx. 0.5 %
Residual ripple	< 50 mV_{pp}	< 150 mV_{pp} (typ. 50 mV_{pp})	< 150 mV_{pp} (typ. 50 mV_{pp})
Spikes (bandwidth: 20 MHz)	< 200 mV_{pp}	< 240 mV_{pp} (typ. 150 mV_{pp})	< 240 mV_{pp} (typ. 150 mV_{pp})
Adjustment range	24 ... 28.8 V (max. 240 W)	22.8 ... 28 V	22.8 ... 28 V
Status display	Green LED for 24 V OK	Green LED for 24 V OK	Green LED for 24 V OK
Response on activation/deactivation	Overshoot of V_{out} approx. 3 %	Overshoot of V_{out} approx. 4 %	Overshoot of V_{out} approx. 4 %
Startup delay/voltage rise	< 1 s/< 50 ms	< 0.1 s at 230 V AC/typ. 50 ms	< 0.1 s at 230 V AC/typ. 50 ms
Rated current $I_{out\ rated}$	**10 A**	**10 A**	**10 A**
Current range			
• Up to +45 °C	0 ... 10 A	0 ... 12 A	0 ... 12 A
• Up to +60 °C	0 ... 10 A	0 ... 10 A	0 ... 10 A
Dynamic overcurrent on			
• Power-up on short-circuit	Approx. 12 A constant current	Typ. 30 A for 100 ms	Typ. 30 A for 100 ms
• Short-circuit during operation	Typ. 30 A for 25 ms	Typ. 33 A for 200 ms	Typ. 33 A for 200 ms
Parallel switching for enhanced performance	Yes, 2 units (switchable characteristic)	Yes, 2 units	Yes, 2 units

Continued on page 5/4.

1) SIPLUS module 6AG1 334-3BA00-4AA0 for use under medial load (e.g. chlorine sulfur atmosphere).

2) SIPLUS module 6AG1 334-2BA01-4AA0 for use under medial load (e.g. chlorine sulfur atmosphere).

The S7-300 version	The flat design	The universal type
		
The field-proven power supply in SIMATIC S7-300 design; with PS-CPU connecting comb and for snap-mounting on S7 rail.	The flat design is of great advantage where only low mounting depths are available, e.g. for use with distributed I/O, in machine benches or alcoves; design matched to SIMATIC ET 200B.	The universal power supply for all supply networks, with a wide-range input from 93 to 264 V AC and 110 to 350 V DC for supply from all typical networks.

10 A	**10 A**	**10 A**
6ES7 307-1KA01-0AA0[3)]	**6EP1 334-1AL12**	**6EP1 334-1SH01**
Single-phase AC **120/230 V AC** Set by means of selector switch on device 85 ... 132 V/170 ... 264 V AC	Single-phase AC **120/230 V AC** Set by means of selector switch on device 85 ... 132 V/170 ... 264 V AC	Single-phase AC or DC **120 to 230 V AC** wide-range input 93 ... 264 V AC or 110 ... 350 V DC
2.3 x $V_{in\ rated}$, 1.3 ms	2.3 x $V_{in\ rated}$, 1.3 ms	2.3 x $V_{in\ rated}$, 1.3 ms
> 20 ms at V_{in} = 93/187 V 50/60 Hz, 47 ... 63 Hz	> 20 ms at V_{in} = 93/187 V 50/60 Hz, 47 ... 63 Hz	> 20 ms at V_{in} = 93/187 V 0/50/60 Hz, 47 ... 63 Hz
4.1/1.8 A < 55 A, < 3 ms	4.0/2.5 A < 65 A, < 3 ms	2.5 to 1.3 A < 20 A, < 3 ms
< 3.3 A^2s T 6.3 A/250 V (not accessible) From 10 A, Characteristic C	< 3.3 A^2s T 6.3 A/250 V (not accessible) From 10 A, Characteristic C	< 1.5 A^2s T 6.3 A (not accessible) From 16 A, Characteristic C
Controlled, isolated DC voltage **24 V DC** ±3 % Approx. 0.1 % Approx. 0.5 %	Controlled, isolated DC voltage **24 V DC** ±1 % Approx. 0.1 % Approx. 0.5 %	Controlled, isolated DC voltage **24 V DC** ±1 % Approx. 0.1 % Approx. 0.2 %
< 150 mV_{pp} (typ. 40 mV_{pp}) < 240 mV_{pp} (typ. 100 mV_{pp})	< 150 mV_{pp} (typ. 50 mV_{pp}) < 240 mV_{pp} (typ. 200 mV_{pp})	< 100 mV_{pp} < 100 mV_{pp}
– Green LED for 24 V OK No overshoot of V_{out} (soft start)	22 ... 29 V Green LED for 24 V OK No overshoot of V_{out} (soft start)	– Green LED for 24 V OK No overshoot of V_{out} (soft start)
< 1.5 s/typ. 80 ms **10 A**	< 2 s/typ. 40 ms **10 A**	< 3 s/typ. 100 ms **10 A**
0 ... 10 A 0 ... 10 A	0 ... 10 A 0 ... 10 A	0 ... 10 A 0 ... 10 A
Typ. 35 A for 80 ms Typ. 35 A for 150 ms Not permissible	Typ. 35 A for 700 ms Typ. 35 A for 700 ms Yes, 2 units	Approx. 11 A constant current Approx. 11 A constant current Yes, 2 units

Continued on page 5/5.

3) SIPLUS module 6AG1 307-1KA01-4AA0 for use under medial load (e.g. chlorine sulfur atmosphere).

SITOP 24 V
Single-phase and two-phase

Output current 10 A

	SITOP modular	SITOP smart	SITOP smart
Power supply, type	**10 A**	**10 A**	**10 A**
Order No.	**6EP1 334-3BA00**	**6EP1 334-2AA01**	**6EP1 334-2BA01**
Efficiency			
Efficiency at $V_{out\ rated}$, $I_{out\ rated}$	Approx. 87 %	Approx. 90 %	Approx. 91 %
Power loss at $V_{out\ rated}$, $I_{out\ rated}$	Approx. 36 W	Approx. 27 W	Approx. 24 W
Closed-loop control			
Dyn. mains compensation ($V_{in\ rated}$ ± 15 %)	Typ. ± 0.1 % V_{out}	Typ. ± 0.3 % V_{out}	Typ. ± 0.3 % V_{out}
Dynamic load smoothing (I_{out}: 50/100/50 %)	Typ. + 3 % V_{out}	Typ. ± 1 % V_{out}	Typ. ± 1 % V_{out}
Load step settling time			
• 50 to 100 %	< 5 ms (typ. 2 ms)	Typ. 0.2 ms	Typ. 0.2 ms
• 100 to 50 %	< 5 ms (typ. 2 ms)	Typ. 0.2 ms	Typ. 0.2 ms
Protection and monitoring			
Output overvoltage protection	< 35 V	< 33 V	< 33 V
Current limit	Typ. 12 A	Typ. 12.5 ... 13.5 A, overload capability 150 % $I_{out\ rated}$ up to 5 s/min	Typ. 12.5 ... 13.5 A, overload capability 150 % $I_{out\ rated}$ up to 5 s/min
Short-circuit protection	Optional constant current characteristic approx. 12 A or latching shutdown	Constant current characteristic	Constant current characteristic
Sustained short-circuit current rms value	Approx. 12 A	Approx. 16 A	Approx. 16 A
Overload/short-circuit indicator	Yellow LED for "overload", red LED for "latching shutdown"	–	–
Safety			
Primary/secondary electrical isolation	Safety extra-low output voltage V_{out} to EN 60950 and EN 50178	Safety extra-low output voltage V_{out} to EN 60950 and EN 50178	Safety extra-low output voltage V_{out} to EN 60950 and EN 50178
Protection class	Class I	Class I	Class I
Leakage current	< 3.5 mA (typ. 0.32 mA)	< 3.5 mA (typ. 0.8 mA)	< 3.5 mA (typ. 0.8 mA)
German Technical Inspectorate approval	Yes	Notified Body (CB Scheme)	Notified Body (CB Scheme)
CE mark	Yes	Yes	Yes
UL/cUL (CSA) approval	Yes, cULus-listed (UL 508, CSA C22.2 No. 14), File E197259	Yes, cULus-listed (UL 508, CSA C22.2 No. 14), File E197259, cCSAus (CSA C22.2 No. 60950-1, UL 60950-1)	Yes, cULus-listed (UL 508, CSA C22.2 No. 14), File E197259, cCSAus (CSA C22.2 No. 60950-1, UL 60950-1)
Explosion protection	–	ATEX EX II 3G EEx nA II T4 U; UL 1604	ATEX EX II 3G EEx nA II T4 U; UL 1604
FM approval	–	–	–
Marine approval	–	GL	GL
Degree of protection (EN 60529)	IP20	IP20	IP20
EMC			
Emitted interference	EN 55022 Class B	EN 55022 Class B	EN 55022 Class B
Supply-harmonics limitation	EN 61000-3-2	–	EN 61000-3-2
Noise immunity	EN 61000-6-2	EN 61000-6-2	EN 61000-6-2
Operating data			
Ambient temperature range	0 ... +60 °C with natural convection	0 ... +60 °C with natural convection	0 ... +60 °C with natural convection
Transport/storage temperature range	–25 ... +85 °C	–40 ... +85 °C	–40 ... +85 °C
Humidity class	Climate class 3K3 to EN 60721, no condensation	Climate class 3K3 to EN 60721, no condensation	Climate class 3K3 to EN 60721, no condensation
Mechanics			
Connections			
• Supply input L, N, PE	One screw terminal each for 0.2 ... 2.5 mm² single-core/ finely stranded	One screw terminal each for 0.5 ... 2.5 mm² single-core/ finely stranded	One screw terminal each for 0.5 ... 2.5 mm² single-core/ finely stranded
• Output +	2 screw terminals for 0.2 ... 2.5 mm²	2 screw terminals for 0.5 ... 2.5 mm²	2 screw terminals for 0.5 ... 2.5 mm²
• Output –	2 screw terminals for 0.2 ... 2.5 mm²	2 screw terminals for 0.5 ... 2.5 mm²	2 screw terminals for 0.5 ... 2.5 mm²
Dimensions (W x H x D) in mm	90 x 125 x 125	70 x 125 x 125	70 x 125 x 125
Weight, approx.	1.4 kg	0.75 kg	0.8 kg
Installation	Snaps onto DIN rail EN 60715 35x7.5/15	Snaps onto DIN rail EN 60715 35x7.5/15	Snaps onto DIN rail EN 60715 35x7.5/15
Accessories	Buffer module (6EP1961-3BA00) Signaling module (6EP1961-3BA10) Redundancy module (6EP1961-3BA20)	–	–

The S7-300 version	The flat design	The universal type
10 A	**10 A**	**10 A**
6ES7 307-1KA01-0AA0	**6EP1 334-1AL12**	**6EP1 334-1SH01**
Approx. 87 % Approx. 34 W	Approx. 89 % Approx. 30 W	Approx. 85 % Approx. 42 W
Typ. ±0.3 % V_{out} Typ. ±2.5 % V_{out}	Typ. ±0.3 % V_{out} Typ. ±0.6 % V_{out}	Typ. ±0.3 % V_{out} Typ. ±1.5 % V_{out}
< 5 ms < 5 ms	< 5 ms (typ. 0.1 ms) < 5 ms (typ. 0.2 ms)	< 20 ms (typ. 10 ms) < 20 ms (typ. 10 ms)
Additional control loop, shutdown at approx. 30 V, automatic restart 11 ... 12 A	Additional control loop, shutdown at approx. 33 V, automatic restart 11 ... 13 A	Yes, acc. to EN 60950 11 ... 13 A
Electronic shutdown, automatic restart < 10 A –	Electronic shutdown, automatic restart < 10 A –	Constant current characteristic approx. 11 A < 14 A –
Yes, safety extra-low output voltage V_{out} to EN 60950 and EN 50178 Class I < 3.5 mA (typ. 0.5 mA)	Yes, safety extra-low output voltage V_{out} to EN 60950 and EN 50178 Class I < 3.5 mA (typ. 0.27 mA)	Yes, safety extra-low output voltage V_{out} to EN 60950 Class I < 3.5 mA
Yes Yes UL-listed (UL 508), File E143289, CSA (CSA C22.2 No. 14)	Yes Yes cULus-listed (UL 508, CSA C22.2 No. 14), File E197259	Yes Yes cULus-listed (UL 508, CSA C22.2 No. 14), File E143289
– Class I Div. 2 Group A, B, C, D, T4 in S7-300 system IP20	– – – IP20	– – – IP20
EN 55022 Class B EN 61000-3-2 EN 61000-6-2	EN 55022 Class B – EN 61000-6-2	EN 55022 Class B EN 61000-3-2 EN 61000-6-2
0 ... +60 °C with natural convection –40 ... +85 °C Climate class 3K3 to EN 60721, no condensation	0 ... +60 °C with natural convection –25 ... +85 °C Climate class 3K3 to EN 60721, no condensation	0 ... +60 °C with natural convection –25 ... +85 °C Climate class 3K3 to EN 60721, no condensation
One screw terminal each for 0.5 ... 2.5 mm² single-core/ finely stranded 4 screw terminals for 0.5 ... 2.5 mm² 4 screw terminals for 0.5 ... 2.5 mm²	One screw terminal each for 0.5 ... 2.5 mm² single-core/ finely stranded 3 screw terminals for 0.5 ... 2.5 mm² 3 screw terminals for 0.5 ... 2.5 mm²	One screw terminal each for 0.5 ... 2.5 mm² single-core/ finely stranded 3 screw terminals for 0.5 ... 2.5 mm² 3 screw terminals for 0.5 ... 2.5 mm²
120 x 125 x 120 1.1 kg Snaps onto S7 rail	160 x 130 x 60 0.72 kg Snaps onto DIN rail EN 60715 35x7.5/15	200 x 125 x 135 1.8 kg Snaps onto DIN rail EN 60715 35x15 or S7 rail
Mounting adapter for DIN rail (6ES7390-6BA00-0AA0) and PS-CPU connection comb (6ES7390-7BA00-0AA0)	Mounting bracket (6EP1971-1AA01)	–

Notes

SITOP 24 V
Single-phase and two-phase

6

SITOP 24 V
Single-phase and two-phase

Output currents 20 and 40 A

Overview

SITOP modular

SITOP modular

Application

The modular power supply units with single-phase and two-phase inputs for global use; with switchable output characteristics; functional expansion possible using add-on modules.

Technical specifications

Power supply, type	**20 A**	**40 A**
Order No.	**6EP1 336-3BA00**	**6EP1 337-3BA00**
Input	Single-phase/two-phase AC	Single-phase/two-phase AC
Rated voltage $V_{in\ rated}$	**120/230 V AC** Set by means of wire jumper on the device	**120/230 V AC** Set by means of wire jumper on the device
Voltage range	85 ... 132/176 ... 264 V (startup from V_{in} > 93/183 V)	85 ... 132/176 ... 264 V (startup from V_{in} > 95/190 V)
Overvoltage resistance	2.3 x $V_{in\ rated}$, 1.3 ms	2.3 x $V_{in\ rated}$, 1.3 ms
Mains buffering at $I_{out\ rated}$	> 20 ms at V_{in} = 230 V	> 20 ms at V_{in} = 230 V
Rated line frequency; rated line-frequency range	50/60 Hz, 47 ... 63 Hz	50/60 Hz, 47 ... 63 Hz
Rated current $I_{in\ rated}$	7.7/3.5 A	15.0/8.0 A
Switch-on current limit (+25 °C)	< 60 A	< 125 A
I^2t	< 9.9 A^2s	< 26 A^2s
Built-in line-side fuse	Yes	Yes
Recommended miniature circuit breaker (IEC 898) in the mains power input	10 A, Characteristic C (2-pole-linked with two-phase operation) or motor protecting switch 3RV1421-1JA10 (120 V) or 3RV1421-1FA10 (230 V)	20 A, Characteristic C (2-pole-linked with two-phase operation) or motor protecting switch 3RV1421-4BA10 (120 V) or 3RV1421-1JA10 (230 V)
Output	Controlled, isolated DC voltage	Controlled, isolated DC voltage
Rated voltage $V_{out\ rated}$	**24 V DC**	**24 V DC**
Total tolerance	±3 %	±3 %
• Static mains compensation	Approx. 0.1 %	Approx. 0.1 %
• Static load smoothing	Approx. 0.1 %	Approx. 0.1 %
Residual ripple	< 100 mV_{pp} (typ. 30 mV_{pp})	< 100 mV_{pp} (typ. 60 mV_{pp})
Spikes (bandwidth: 20 MHz)	< 200 mV_{pp} (typ. 60 mV_{pp})	< 200 mV_{pp} (typ. 120 mV_{pp})
Adjustment range	24 ... 28.8 V (max. 480 W)	24 ... 28.8 V (max. 960 W)
Status display	Green LED for 24 V OK	Green LED for 24 V OK
Response on activation/deactivation	Overshoot of V_{out} approx. 3 %	Overshoot of V_{out} approx. 3 %
Startup delay/voltage rise	< 0.1 s/< 50 ms	< 0.1 s/< 50 ms
Rated current $I_{out\ rated}$	**20 A**	**40 A**
Current range		
• Up to +45 °C	0 ... 20 A	0 ... 40 A
• Up to +60 °C	0 ... 20 A	0 ... 40 A
Dynamic overcurrent on		
• Power-up on short-circuit	Approx. 23 A constant current	Approx. 46 A constant current
• Short-circuit during operation	Typ. 60 A for 25 ms	Typ. 120 A for 25 ms
Parallel switching for enhanced performance	Yes, 2 units (switchable characteristic)	Yes, 2 units (switchable characteristic)

Continued on page 6/3.

	SITOP modular	SITOP modular
Power supply, type	**20 A**	**40 A**
Order No.	**6EP1 336-3BA00**	**6EP1 337-3BA00**
Efficiency		
Efficiency at $V_{out\ rated}$, $I_{out\ rated}$	Approx. 89 %	Approx. 88 %
Power loss at $V_{out\ rated}$, $I_{out\ rated}$	Approx. 59 W	Approx. 131 W
Closed-loop control		
Dyn. mains compensation ($V_{in\ rated}$ ± 15 %)	< 1 % V_{out}	< 1 % V_{out}
Dynamic load smoothing (I_{out}: 50/100/50 %)	Typ. ± 2 % V_{out}	Typ. ± 2 % V_{out}
Load step settling time		
• 50 to 100 %	< 5 ms (typ. 2 ms)	< 5 ms (typ. 2 ms)
• 100 to 50 %	< 5 ms (typ. 2 ms)	< 5 ms (typ. 2 ms)
Protection and monitoring		
Output overvoltage protection	< 35 V	< 35 V
Current limit	Typ. 23 A	Typ. 46 A
Short-circuit protection	Optional constant current characteristic approx. 23 A or latching shutdown	Optional constant current characteristic approx. 46 A or latching shutdown
Sustained short-circuit current rms value	Approx. 23 A	Approx. 46 A
Overload/short-circuit indicator	Yellow LED for "overload", red LED for "latching shutdown"	Yellow LED for "overload", red LED for "latching shutdown"
Safety		
Primary/secondary electrical isolation	Yes, safety extra-low output voltage V_{out} to EN 60950 and EN 50178	Yes, safety extra-low output voltage V_{out} to EN 60950 and EN 50178
Protection class	Class I	Class I
Leakage current	< 3.5 mA (typ. 0.4 mA)	< 3.5 mA (typ. 0.4 mA)
German Technical Inspectorate approval	Yes	Yes
CE mark	Yes	Yes
UL/cUL (CSA) approval	cULus-listed (UL 508, CSA C22.2 No. 14), File E197259	cULus-listed (UL 508, CSA C22.2 No. 14), File E197259
Degree of protection (EN 60529)	IP20	IP20
EMC		
Emitted interference	EN 55022 Class B	EN 55022 Class B
Supply-harmonics limitation	EN 61000-3-2	–
Noise immunity	EN 61000-6-2	EN 61000-6-2
Operating data		
Ambient temperature range	0 ... +60 °C with natural convection	0 ... +60 °C with natural convection
Transport/storage temperature range	–25 ... +85 °C	–25 ... +85 °C
Humidity class	Climate class 3K3 to EN 60721, no condensation	Climate class 3K3 to EN 60721, no condensation
Mechanics		
Connections		
• Supply input L, N, PE	One screw terminal each for 0.2 ... 4 mm² single-core/ finely stranded	One screw terminal each for 0.2 ... 4 mm² single-core/ finely stranded
• Output +	2 screw terminals for 0.5 ... 4 mm²	2 screw terminals for 0.5 ... 10 mm²
• Output –	2 screw terminals for 0.5 ... 4 mm²	2 screw terminals for 0.5 ... 10 mm²
Dimensions (W x H x D) in mm	160 x 125 x 125	240 x 125 x 125
Weight, approx.	2.2 kg	2.9 kg
Installation	Snaps onto DIN rail EN 60715 35x7.5/15	Snaps onto DIN rail EN 60715 35x7.5/15
Accessories	Buffer module (6EP1961-3BA00) Signaling module (6EP1961-3BA10) Redundancy module (6EP1961-3BA20)	Buffer module (6EP1961-3BA00) Signaling module (6EP1961-3BA10) Redundancy module (6EP1961-3BA20)

Notes

SITOP 24 V
Three-phase

7

Output currents 5 to 40 A

SITOP 24 V
Three-phase

Output currents 5 to 20 A

Overview

	SITOP modular	SITOP modular	The well-proven
			

Application

The modular power supply units with wide-range input for two-phase connection to three-phase supply networks; for global use; with switchable output characteristics; functional expansion possible using add-on modules.

The well-proven power supply with three-phase wide-range input voltage for supplying all standard applications in automation engineering.

Technical specifications

Power supply, type	**5 A**	**10 A**	**10 A**
Order No.	**6EP1 333-3BA00**	**6EP1 334-3BA00**	**6EP1 434-2BA00**
Input			
Rated voltage $V_{in\ rated}$	Two-phase AC **120-230/230-500 V 2 AC** Set by means of selector switch on device	Two-phase AC **120-230/230-500 V 2 AC** Set by means of selector switch on device	Three-phase AC **400-500 V 3 AC** wide-range input
Voltage range	85 ... 264 V/176 ... 550 V 2 AC	85 ... 264 V/176 ... 550 V 2 AC	360 ... 550 V 3 AC (340 ... 360 V for max. 2 s or for max. 0.9 x $I_{out\ rated}$)
Overvoltage resistance	1300 V_{peak}, 1.3 ms	1300 V_{peak}, 1.3 ms	2.3 x $V_{in\ rated}$, 1.3 ms
Mains buffering at $I_{out\ rated}$	Typ. 150 ms at V_{in} = 400 V	Typ. 120 ms at V_{in} = 400 V	> 6 ms at V_{in} = 360 V
Rated line frequency; rated line-frequency range	50/60 Hz, 47 ... 63 Hz	50/60 Hz, 47 ... 63 Hz	50/60 Hz, 47 ... 63 Hz
Rated current $I_{in\ rated}$	2.2-1.2/1.2-0.61 A	4.4-2.4/2.4-1.1 A	0.65 A (at 400 V)
Switch-on current limit (+25 °C)	< 35 A	< 35 A	< 25 A
I^2t	< 1.7 A^2s	< 4.0 A^2s	< 1.0 A^2s
Built-in line-side fuse	T 3, 15 A	T 6.3 A	No
Required protection in the supply feeder	Miniature circuit breaker 6 A (10 A) Characteristic C (B), 2-pole connection or motor circuit-breaker 3RV1021-1DA10, setting 3 A	Miniature circuit breaker 6 A (10 A) Characteristic C (B), 2-pole connection or motor circuit-breaker 3RV1021-1DA10, setting 3 A	3-pole connected miniature circuit-breaker, Char. C up to 25 A (recommended: 6 A) or motor circuit-breaker 3RV1021-1DA10, setting 3 A or 3RV1721-1DD10 (UL 489)
Output	Controlled, isolated DC voltage	Controlled, isolated DC voltage	Controlled, isolated DC voltage
Rated voltage $V_{out\ rated}$	**24 V DC**	**24 V DC**	**24 V DC**
Total tolerance	±3 %	±3 %	±3 %
• Static mains compensation	Approx. 0.1 %	Approx. 0.1 %	
• Static load smoothing	Approx. 0.1 %	Approx. 0.1 %	
Residual ripple	< 50 mV_{pp}	< 50 mV_{pp}	< 150 mV_{pp} (typ. 60 mV_{pp})
Spikes (bandwidth: 20 MHz)	< 200 mV_{pp}	< 200 mV_{pp}	< 240 mV_{pp} (typ. 120 mV_{pp})
Adjustment range	24 ... 28.8 V (max. 120 W)	24 ... 28.8 V (max. 240 W)	22.8 ... 26.4 V
Status display	Green LED for 24 V OK	Green LED for 24 V OK	Green LED for 24 V OK
Response on activation/deactivation	Overshoot of V_{out} approx. 3 %	Overshoot of V_{out} approx. 3 %	No overshoot of V_{out} (soft start)
Startup delay/voltage rise	< 1 s/< 50 ms	< 1 s/< 50 ms	< 3 s/typ. 40 ms
Rated current $I_{out\ rated}$	**5 A**	**10 A**	**10 A**
Current range			
• Up to +45 °C	0 ... 5 A	0 ... 10 A	0 ... 10 A
• Up to +60 °C	0 ... 5 A	0 ... 10 A	0 ... 10 A (up to +55 °C)
Dynamic overcurrent on			
• Power-up on short-circuit	Approx. 5.5 A constant current	Approx. 12 A constant current	Constant current approx. 18 A
• Short-circuit during operation	Typ. 15 A for 25 ms	Typ. 30 A for 25 ms	Constant current approx. 18 A
Parallel switching for enhanced performance	Yes, 2 units (switchable characteristic)	Yes, 2 units (switchable characteristic)	Yes, 2 units[1)]

Continued on page 7/4.

[1)] Only permissible at ambient temperature 0 °C to 45 °C.

SITOP modular	SITOP modular	The well-proven
		
The modular power supply with three-phase wide-range input for worldwide use; narrow design; 50 % Extra Power for 5 s and switchable output characteristics; extended functions possible by means of add-on modules.	Modular power supply with three-phase wide-range input for use around the world in a wide variety of applications; functional expansion possible using add-on modules.	The well-proven power supply with three-phase wide-range input voltage for supplying all standard applications in automation engineering.
20 A	**20 A**	**20 A**
6EP1 436-3BA01	**6EP1 436-3BA00**	**6EP1 436-2BA00**
Three-phase AC **400-500 V 3 AC** wide-range input 360 ... 550 V[1]	Three-phase AC **400-500 V 3 AC** wide-range input 320 ... 550 V (startup from V_{in} > 340 V)	Three-phase AC **400-500 V 3 AC** wide-range input 360 ... 550 V 3 AC (340 ... 360 V for max. 2 s or for max. 0.9 x $I_{out\ rated}$)
2.3 x $V_{in\ rated}$, 1.3 ms	2.3 x $V_{in\ rated}$, 1.3 ms	2.3 x $V_{in\ rated}$, 1.3 ms
> 15 ms at V_{in} = 400 V 50/60 Hz, 47 ... 63 Hz 1.1-0.9 A < 18 A	> 6 ms at V_{in} = 400 V 50/60 Hz, 47 ... 63 Hz 1.1-0.9 A < 35 A	> 3 ms at V_{in} = 360 V 50/60 Hz, 47 ... 63 Hz 1.2 A (at 400 V) < 25 A
< 0.8 A^2s No 3-pole connected miniature circuit-breaker 6 to 16 A characteristic C or motor circuit-breaker 3RV1021-1DA10, setting 3 A or 3RV1721-1DD10 (UL 489)	< 0.7 A^2s No 3-pole connected miniature circuit-breaker 6 to 16 A characteristic C or motor circuit-breaker 3RV1021-1DA10, setting 3 A or 3RV1721-1DD10 (UL 489)	< 1.0 A^2s No 3-pole connected miniature circuit-breaker, Char. C up to 25 A (recommended: 6 A) or motor circuit-breaker 3RV1021-1DA10, setting 3 A or 3RV1721-1DD10 (UL 489)
Controlled, isolated DC voltage **24 V DC** ± 3 % Approx. 0.1 % Approx. 0.2 %	Controlled, isolated DC voltage **24 V DC** ± 3 % Approx. 0.1 % Approx. 0.2 %	Controlled, isolated DC voltage **24 V DC** ± 3 %
< 100 mV_{pp} < 200 mV_{pp} 24 ... 28.8 V (max. 480 W) Green LED for 24 V OK No overshoot of V_{out} (soft start)	< 100 mV_{pp} < 200 mV_{pp} 24 ... 28.8 V (max. 480 W) Green LED for 24 V OK No overshoot of V_{out} (soft start)	< 150 mV_{pp} (typ. 60 mV_{pp}) < 240 mV_{pp} (typ. 120 mV_{pp}) 22.8 ... 26.4 V [1] Green LED for 24 V OK No overshoot of V_{out} (soft start)
< 2.5 s/< 500 ms **20 A** 0 ... 20 A 0 ... 20 A	< 2.5 s/< 500 ms **20 A** 0 ... 20 A 0 ... 20 A	< 3 s/typ. 40 ms **20 A** 0 ... 20 A 0 ... 20 A
Approx. 23 A constant current Typ. 60 A for 25 ms Yes, 2 units (switchable characteristic)	Approx. 23 A constant current Typ. 60 A for 25 ms Yes, 2 units (switchable characteristic)	Constant current approx. 30 A Constant current approx. 30 A Yes, 2 units[2]

Continued on page 7/5.

[1] 320 ... 575 V voltage range available soon

[2] Only permissible at ambient temperature 0 °C to 45 °C.

Output currents 5 to 20 A

	SITOP modular	SITOP modular	The well-proven
Power supply, type	**5 A**	**10 A**	**10 A**
Order No.	**6EP1 333-3BA00**	**6EP1 334-3BA00**	**6EP1 434-2BA00**
Efficiency			
Efficiency at $V_{out\ rated}$, $I_{out\ rated}$	Approx. 87 %	Approx. 87 %	Approx. 89 %
Power loss at $V_{out\ rated}$, $I_{out\ rated}$	Approx. 18 W	Approx. 36 W	Approx. 30 W
Closed-loop control			
Dyn. mains compensation ($V_{in\ rated}$ ± 15 %)	Typ. 0.1 % V_{out}	Typ. 0.1 % V_{out}	<1 % V_{out}
Dynamic load smoothing (I_{out}: 50/100/50 %)	Typ. 3 % V_{out}	Typ. 3 % V_{out}	Typ. ± 2 % V_{out}
Load step settling time			
• 50 to 100 %	< 5 ms (typ. 2 ms)	< 5 ms (typ. 2 ms)	< 2 ms
• 100 to 50 %	< 5 ms (typ. 2 ms)	< 5 ms (typ. 2 ms)	< 2 ms
Protection and monitoring			
Output overvoltage protection	< 35 V	< 35 V	Yes, acc. to EN 60950
Current limit	Typ. 5.5 A	Typ. 12 A	Typ. 10.5 ... 13 A
Short-circuit protection	Optional constant current characteristic approx. 5.5 A or latching shutdown	Optional constant current characteristic approx. 12 A or latching shutdown	Constant current characteristic to 0 V
Sustained short-circuit current rms value	Approx. 5.5 A	Approx. 12 A	< 20 A
Overload/short-circuit indicator	Yellow LED for "overload", red LED for "latching shutdown"	Yellow LED for "overload", red LED for "latching shutdown"	–
Safety			
Primary/secondary electrical isolation	Yes, safety extra-low output voltage V_{out} to EN 60950 and EN 50178	Yes, safety extra-low output voltage V_{out} to EN 60950 and EN 50178	Yes, safety extra-low output voltage V_{out} to EN 60950
Protection class	Class I	Class I	Class I
Leakage current	< 3.5 mA (typ. 0.25 mA)	< 3.5 mA (typ. 0.32 mA)	< 0.35 mA (typ. 0.35 mA)
German Technical Inspectorate approval	Yes	Yes	Yes; CB scheme
CE mark	Yes	Yes	Yes
UL/cUL (CSA) approval	cULus-listed (UL 508, CSA C22.2 No. 14), File E197259	cULus-listed (UL 508, CSA C22.2 No. 14), File E197259	cULus-listed (UL 508, CSA C22.2 No. 142), File E143289
Degree of protection (EN 60529)	IP20	IP20	IP20
EMC			
Emitted interference	EN 55022 Class B	EN 55022 Class B	EN 55022 Class B
Supply-harmonics limitation	EN 61000-3-2	EN 61000-3-2	EN 61000-3-2
Noise immunity	EN 61000-6-2	EN 61000-6-2	EN 61000-6-2
Operating data			
Ambient temperature range	0 ... +60 °C with natural convection	0 ... +60 °C with natural convection	0 ... +55 °C with natural convection
Transport/storage temperature range	–25 ... +85 °C	–25 ... +85 °C	–25 ... +85 °C
Humidity class	Climate class 3K3 to EN 60721, no condensation	Climate class 3K3 to EN 60721, no condensation	Climate class 3K3 to EN 60721, no condensation
Mechanics			
Connections			
• Supply input L1, L2, L3, PE	One screw terminal each for 0.2 ... 2.5 mm^2 single-core/ finely stranded	One screw terminal each for 0.2 ... 2.5 mm^2 single-core/ finely stranded	One screw terminal each for 0.5 ... 2.5 mm^2 single-core/ finely stranded
• Output +	2 screw terminals for 0.2 ... 2.5 mm^2	2 screw terminals for 0.2 ... 2.5 mm^2	1 screw terminal for 0.33 ... 10 mm^2
• Output –	2 screw terminals for 0.2 ... 2.5 mm^2	2 screw terminals for 0.2 ... 2.5 mm^2	2 screw terminals for 0.33 ... 10 mm^2
Dimensions (W x H x D) in mm	70 x 125 x 125	90 x 125 x 125	280 x 125 x 92
Weight, approx.	1.2 kg	1.4 kg	2 kg
Installation	Snaps onto DIN rail EN 60715 35x7.5/15	Snaps onto DIN rail EN 60715 35x7.5/15	Snaps onto DIN rail EN 60715 35x7.5/15
Accessories	Buffer module (6EP1961-3BA00) Signaling module (6EP1961-3BA10) Redundancy module (6EP1961-3BA20)	Buffer module (6EP1961-3BA00) Signaling module (6EP1961-3BA10) Redundancy module (6EP1961-3BA20)	90° mounting bracket (6EP1971-2BA00)

SITOP modular	SITOP modular	The well-proven
20 A	**20 A**	**20 A**
6EP1 436-3BA01	**6EP1 436-3BA00**	**6EP1 436-2BA00**
Approx. 93 %	Approx. 90 %	Approx. 89 %
Approx. 36 W	Approx. 53 W	Approx. 59 W
<1 % V_{out}	<1 % V_{out}	<1 % V_{out}
Typ. ±2 % V_{out}	Typ. ±2 % V_{out}	Typ. ±2 % V_{out}
< 10 ms (typ. 2 ms) < 10 ms (typ. 2 ms)	< 10 ms (typ. 4 ms) < 10 ms (typ. 4 ms)	< 2 ms < 2 ms
< 35 V Typ. 23 A, overload capability 150 % $I_{out\ rated}$ up to 5 s/min	< 35 V Typ. 23 A	Yes, acc. to EN 60950 Typ. 21 ... 26 A
Optional constant current characteristic approx. 23 A or latching shutdown Approx. 23 A	Optional constant current characteristic approx. 23 A or latching shutdown Approx. 23 A	Constant current characteristic to 0 V < 30 A
Yellow LED for "overload", red LED for "latching shutdown"	Yellow LED for "overload", red LED for "latching shutdown"	–
Yes, safety extra-low output voltage V_{out} to EN 60950 and EN 50178 Class I < 3.5 mA	Yes, safety extra-low output voltage V_{out} to EN 60950 and EN 50178 Class I < 3.5 mA	Yes, safety extra-low output voltage V_{out} to EN 60950 Class I < 0.35 mA (550 V/60 Hz)
Yes	Yes	Yes; CB scheme
Yes cULus-listed (UL 508, CSA 22.2 No. 14), File E197259	Yes UL-listed (UL 508) File E197259, CSA (CSA C22.2 No. 14, CSA C22.2 No. 107.1)	Yes cULus-listed (UL 508, CSA 22.2 No. 142), File E143289
IP20	IP20	IP20
EN 55022 Class B EN 61000-3-2 EN 61000-6-2	EN 55022 Class B EN 61000-3-2 EN 61000-6-2	EN 55022 Class B EN 61000-3-2 EN 61000-6-2
–10 ... +60 °C with natural convection	0 ... +60 °C with natural convection	0 ... +55 °C with natural convection
–25 ... +85 °C Climate class 3K3 to EN 60721, no condensation	–25 ... +85 °C Climate class 3K3 to EN 60721, no condensation	–25 ... +85 °C Climate class 3K3 to EN 60721, no condensation
One screw terminal each for 0.2 ... 4 mm^2 single-core/ finely stranded 2 screw terminals for 0.2 ... 4 mm^2 2 screw terminals for 0.2 ... 4 mm^2	One screw terminal each for 0.2 ... 4 mm^2 single-core/ finely stranded 2 screw terminals for 0.33 ... 4 mm^2 2 screw terminals for 0.33 ... 4 mm^2	One screw terminal each for 0.5 ... 2.5 mm^2 single-core/ finely stranded 1 screw terminal for 0.33 ... 10 mm^2 2 screw terminals for 0.33 ... 10 mm^2
70 x 125 x 125 1.2 kg Snaps onto DIN rail EN 60715 35x7.5/15	160 x 125 x 125 2 kg Snaps onto DIN rail EN 60715 35x7.5/15	280 x 125 x 92 2 kg Snaps onto DIN rail EN 60715 35x7.5/15
Buffer module (6EP1961-3BA00) Signaling module (6EP1961-3BA10) Redundancy module (6EP1961-3BA20)	Buffer module (6EP1961-3BA00) Signaling module (6EP1961-3BA10) Redundancy module (6EP1961-3BA20)	90° mounting bracket (6EP1971-2BA00)

SITOP 24 V
Three-phase

Output currents 30 to 40 A

Overview

The well-proven

SITOP modular

Application

The well-proven power supplies with three-phase wide-range input voltage for supplying all standard applications in automation engineering.

Modular power supplies with three-phase wide-range input for use around the world in a wide variety of applications; functional expansion possible using add-on modules.

Technical specifications

Power supply, type	**30 A**	**40 A**	**40 A**
Order No.	**6EP1 437-2BA00**	**6EP1 437-2BA10**	**6EP1 437-3BA00**[2]
Input			
Rated voltage $V_{in\ rated}$	Three-phase AC **400-500 V 3 AC** wide-range input	Three-phase AC **400-500 V 3 AC** wide-range input	Three-phase AC **400-500 V 3 AC** wide-range input
Voltage range	360 ... 550 V 3 AC (340 ... 360 V for max. 2 s or for max. 0.9 x $I_{out\ rated}$)	360 ... 550 V 3 AC (340 ... 360 V for max. 2 s or for max. 0.9 x $I_{out\ rated}$)	320 ... 550 V (startup from V_{in} > 340 V)
Overvoltage resistance	2.3 x $V_{n\ rated}$, 1.3 ms	2.3 x $V_{in\ rated}$, 1.3 ms	2.3 x $V_{in\ rated}$, 1.3 ms
Mains buffering at $I_{out\ rated}$	> 4.5 ms at V_{in} = 360 V	> 3 ms at V_n = 360 V	> 6 ms at V_{in} = 400 V
Rated line frequency; rated line-frequency range	50/60 Hz, 47 ... 63 Hz	50/60 Hz, 47 ... 63 Hz	50/60 Hz, 47 ... 63 Hz
Rated current $I_{in\ rated}$	1.4 A (at 400 V)	1.9 A (at 400 V)	2.2 A (V_{in} = 400 V)
Switch-on current limit (+25 °C)	< 25 A	< 25 A	< 70 A
I^2t	< 1.0 A^2s	< 1.0 A^2s	< 2.8 A^2s
Built-in line-side fuse	No	No	No
Required protection in the supply feeder	3-pole connected miniature circuit-breaker, Char. C up to 25 A (recommended: 6 A) or motor circuit-breaker 3RV1021-1DA10, setting 3 A or 3RV1721-1DD10 (UL 489)	3-pole connected miniature circuit-breaker, Char. C up to 25 A (recommended: 6 A) or motor circuit-breaker 3RV1021-1DA10, setting 3 A or 3RV1721-1DD10 (UL 489)	3-pole connected miniature circuit-breaker 10 to 16 A characteristic C or motor circuit-breaker 3RV1021-1DA10, setting 3 A or 3RV1721-1DD10 (UL 489)
Output			
Rated voltage $V_{out\ rated}$	Controlled, isolated DC voltage **24 V DC**	Controlled, isolated DC voltage **24 V DC**	Controlled, isolated DC voltage **24 V DC**
Total tolerance	± 3 %	± 3 %	± 3 %
• Static mains compensation			Approx. 0.1 %
• Static load smoothing			Approx. 0.2 %
Residual ripple	< 150 mV_{pp} (typ. 50 mV_{pp})	< 150 mV_{pp} (typ. 50 mV_{pp})	< 100 mV_{pp}
Spikes (bandwidth: 20 MHz)	< 240 mV_{pp} (typ. 200 mV_{pp})	< 240 mV_{pp} (typ. 200 mV_{pp})	< 200 mV_{pp}
Adjustment range	22.8 ... 26.4 V [1]	22.8 ... 26.4 V [1]	24 ... 28.8 V (max. 960 W)
Status display	Green LED for 24 V OK	Green LED for 24 V OK	Green LED for 24 V OK
Response on activation/deactivation	Slight overshoot of V_{out} (< 2 V for max. 500 ms)	Slight overshoot of V_{out} (< 2 V for max. 500 ms)	No overshoot of V_{out} (soft start)
Startup delay/voltage rise	< 3 s/typ. 40 ms	< 3 s/typ. 40 ms	< 2.5 s/< 500 ms
Rated current $I_{out\ rated}$	**30 A**	**40 A**	**40 A**
Current range			
• Up to +45 °C	0 ... 30 A	0 ... 40 A	0 ... 40 A
• Up to +60 °C	0 ... 30 A	0 ... 40 A	0 ... 40 A
Dynamic overcurrent on			
• Power-up on short-circuit	Approx. 60 A for 600 ms	Approx. 70 A for 600 ms	Approx. 46 A constant current
• Short-circuit during operation	Approx. 60 A for 600 ms	Approx. 70 A for 600 ms	Typ. 120 A for 25 ms
Parallel switching for enhanced performance	Yes, 2 units [1]	Yes, 2 units [1]	Yes, 2 units (switchable characteristic)

Continued on page 7/7.

[1] Only permissible at ambient temperature 0 °C to 45 °C.

[2] SIPLUS module 6AG1 437-3BA00-4AA0 for use under medial load (e.g. chlorine sulfur atmosphere)

Output currents 30 to 40 A

	The well-proven	The well-proven	SITOP modular
Power supply, type	**30 A**	**40 A**	**40 A**
Order No.	**6EP1 437-2BA00**	**6EP1 437-2BA10**	**6EP1 437-3BA00**
Efficiency			
Efficiency at $V_{out\ rated}$, $I_{out\ rated}$	Approx. 90 %	Approx. 90 %	Approx. 90 %
Power loss at $V_{out\ rated}$, $I_{out\ rated}$	Approx. 80 W	Approx. 107 W	Approx. 106 W
Closed-loop control			
Dyn. mains compensation ($V_{in\ rated}$ ± 15 %)	<1 % V_{out}	<1 % V_{out}	<1 % V_{out}
Dynamic load smoothing (I_{out}: 50/100/50 %)	Typ. -4 %, +2 % V_{out}	Typ. -4 %, +2 % V_{out}	Typ. ±2 % V_{out}
Load step settling time			
• 50 to 100 %	< 3 ms	< 3 ms	< 10 ms (typ. 4 ms)
• 100 to 50 %	< 3 ms	< 3 ms	< 10 ms (typ. 4 ms)
Protection and monitoring			
Output overvoltage protection	Yes, acc. to EN 60950	Yes, acc. to EN 60950	< 35 V
Current limit	Typ. 31.5 ... 39 A	Typ. 42 ... 52 A	Typ. 46 A
Short-circuit protection	Electronic shutdown, automatic restart	Electronic shutdown, automatic restart	Optional constant current characteristic approx. 46 A or latching shutdown
Sustained short-circuit current rms value	< 48 A	< 62 A	Approx. 46 A
Overload/short-circuit indicator	–	–	Yellow LED for "overload", red LED for "latching shutdown"
Safety			
Primary/secondary electrical isolation	Yes, safety extra-low output voltage V_{out} to EN 60950	Yes, safety extra-low output voltage V_{out} to EN 60950	Yes, safety extra-low output voltage V_{out} to EN 60950 and EN 50178
Protection class	Class I	Class I	Class I
Leakage current	< 0.78 mA (550 V/60 Hz)	< 0.78 mA (550 V/60 Hz)	< 3.5 mA
German Technical Inspectorate approval	Yes; CB scheme	Yes; CB scheme	Yes
CE mark	Yes	Yes	Yes
UL/cUL (CSA) approval	cULus-listed (UL 508, CSA C22.2 No. 142), File E143289	cULus-listed (UL 508, CSA C22.2 No. 142), File E143289	UL-listed (UL 508) File E197259, CSA (CSA C22.2 No. 14, CSA C22.2 No. 107.1)
Degree of protection (EN 60529)	IP20	IP20	IP20
EMC			
Emitted interference	EN 55022 Class B	EN 55022 Class B	EN 55022 Class B
Supply-harmonics limitation	EN 61000-3-2	EN 61000-3-2	EN 61000-3-2
Noise immunity	EN 61000-6-2	EN 61000-6-2	EN 61000-6-2
Operating data			
Ambient temperature range	0 ... +55 °C with natural convection	0 ... +55 °C with natural convection	0 ... +60 °C with natural convection
Transport/storage temperature range	–25 ... +85 °C	–25 ... +85 °C	–25 ... +85 °C
Humidity class	Climate class 3K3 to EN 60721, no condensation	Climate class 3K3 to EN 60721, no condensation	Climate class 3K3 to EN 60721, no condensation
Mechanics			
Connections			
• Supply input L1, L2, L3, PE	One screw terminal each for 0.5 ... 2.5 mm² single-core/ finely stranded	One screw terminal each for 0.5 ... 2.5 mm² single-core/ finely stranded	One screw terminal each for 0.2 ... 4 mm² single-core/ finely stranded
• Output +	1 screw terminal for 0.33 ... 10 mm²	1 screw terminal for 0.33 ... 10 mm²	2 screw terminals for 0.33 ... 10 mm²
• Output –	2 screw terminals for 0.33 ... 10 mm²	2 screw terminals for 0.33 ... 10 mm²	2 screw terminals for 0.33 ... 10 mm²
Dimensions (W x H x D) in mm	280 x 180 x 92	280 x 180 x 92	240 x 125 x 125
Weight, approx.	3.6 kg	3.6 kg	3.2 kg
Installation	Snaps onto DIN rail EN 60715 35x7.5/15	Snaps onto DIN rail EN 60715 35x7.5/15	Snaps onto DIN rail EN 60715 35x7.5/15
Accessories	90° mounting bracket (6EP1971-2BA00)	90° mounting bracket (6EP1971-2BA00)	Buffer module (6EP1961-3BA00) Signaling module (6EP1961-3BA10) Redundancy module (6EP1961-3BA20)

Notes

SITOP
Add-on modules

8

Overview

	SITOP modular signaling module	SITOP modular buffer module	SITOP modular redundancy module
	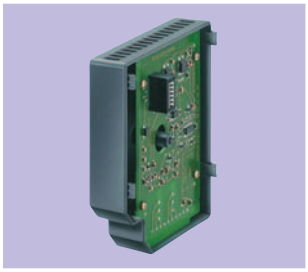		

Application

SITOP modular signaling module	SITOP modular buffer module	SITOP modular redundancy module
Message signals about the operating status of the power supply can be provided with a signaling module in combination with a SITOP modular regulated power supply, and the power supply can be switched ON/OFF remotely; automatic contacting with the power supply.	With short-term power failures, the load current can be backed up without interruption via the buffer module in combination with a SITOP modular regulated power supply. The buffer module is connected in parallel to the output of the power supply.	The redundancy module is used to decouple two SITOP modular regulated power supplies in parallel operation. The 24 V supply is maintained when one power supply fails.

Technical specifications

Order No.	6EP1 961-3BA10[1]	6EP1 961-3BA00	6EP1 961-3BA20[2]
Input/output		Controlled, isolated DC voltage	Controlled, isolated DC voltage
Rated input voltage $V_{in\ rated}$	–	**24 V DC**	**24 V DC**
Input voltage range	–	24 ... 28.8 V DC	24 ... 28.8 V DC
Control inlet	Not isolated input for remote ON/OFF switching of the power supply	–	–
Rated output voltage $V_{out\ rated}$	–	V_{in} – approx. 1 V	V_{in} – approx. 0.5 V
Rated current $I_{out\ rated}$	–	40 A	20 A (max. aggregate current 40 A)
Mains buffering	–	100 ms at 40 A ... 800 ms at 5 A load current	–
Buffering time, max.	–	3 sec	–
Parallel switching for enhanced performance	–	Yes, 2 units	–
Protection and monitoring			
Current limiting, static	–	Typ. 40 A	–
Short-circuit protection	–	Solid-state	–
Signaling/signals			
Operation indicator	–	Green LED for supply voltage > 20.5 V	Green LED for "Infeed 1 and infeed 2 OK"
Signals	Floating relay contacts (changeover contacts, rating 6 A/240 V AC) for "Output voltage OK" and "Power supply availability OK"	–	Floating relay contact (changeover contacts, rating 6 A/240 V AC) for "Infeed 1 and infeed 2 OK", switching threshold adjustable 20 ... 25 V

Continued on Page 8/3.

1) SIPLUS Module 6AG1 961-3BA10-7AA0 for extended temperature range -25 to +70 °C and use under medial load (e.g. chlorine sulfur atmosphere). 6AG1 961-3BA10-6AA0 with hard gold plated contacts.

2) SIPLUS Module 6AG1 437-3BA20-7AA0 for extended temperature range -40 to +70 °C and use under medial load (e.g. chlorine sulfur atmosphere).

	SITOP modular signaling module	SITOP modular buffer module	SITOP modular redundancy module
Order No.	**6EP1 961-3BA10**	**6EP1 961-3BA00**	**6EP1 961-3BA20**
Safety			
Electrical isolation	Yes, safety extra-low voltage acc. to EN 60950 (relay contacts)	Yes, SELV acc. to EN 60950	Yes, safety extra-low voltage acc. to EN 60950 (relay contact)
Protection class	Class I	Class I	Class I
German Technical Inspectorate approval	Yes	Yes	Yes
CE mark	Yes	Yes	Yes
UL/cUL (CSA) approval	UL-listed (UL 508) File E197259, CSA (CSA C22.2 No. 14, CSA C22.2 No. 107.1)	UL-listed (UL 508) File E197259, CSA (CSA C22.2 No. 14, CSA C22.2 No. 107.1)	cULus-listed (UL 508, CSA C22.2 No. 14), File E197259
Degree of protection (EN 60529)	IP20	IP20	IP20
EMC			
Emitted interference	EN 55022 Class B	EN 55022 Class B	EN 55022 Class B
Noise immunity	EN 61000-6-2	EN 61000-6-2	EN 61000-6-2
Operating data			
Ambient temperature range	0 ... +60 °C with natural convection	0 ... +60 °C with natural convection	0 ... +60 °C with natural convection
Transport/storage temperature range	–25 to +85 °C	–25 to +85 °C	–25 to +85 °C
Humidity class	Climate class 3K3 to EN 60721, no condensation	Climate class 3K3 to EN 60721, no condensation	Climate class 3K3 to EN 60721, no condensation
Mechanics			
Connections	Screw terminals for 0.14 ... 2.5 mm^2 single-core/finely stranded	One screw terminal each for + and – for 0.5 ... 10 mm^2 single-core/finely stranded	Input, output and ground: One screw terminal each for 0.33 ... 10 mm^2, single-core/finely stranded; relay contact: One screw terminal each for 0.5 ... 2.5 mm^2, single-core/finely stranded
Dimensions (W x H x D) in mm	26 x 125 x 116	70 x 125 x 125	70 x 125 x 125
Weight, approx.	0.15 kg	1.2 kg	1.0 kg
Installation	Snaps direct onto side of basic unit	Snaps onto DIN rail EN 60715 35x7.5/15	Snaps onto DIN rail EN 60715 35x7.5/15

Overview

SITOP select diagnostics module

Application

The diagnostics module is used in conjunction with 24 V power supplies to distribute the load current over several current circuits and to monitor the individual currents. Faults in individual circuits caused by overload or short-circuit are detected and selectively switched off so that further load current paths remain unaffected by the fault. This achieves fast fault diagnostics and minimizes standstill times.

Technical specifications

Type	**Module 4 x 10 A**
Order No.	**6EP1 961-2BA00**
Input	**Controlled DC voltage**[1]
Rated voltage $V_{in\ rated}$	24 V DC
Voltage range	22 ... 30 V
Overvoltage resistance	35 V; 100 ms
Input current $I_{in\ rated}$	40 A
Output	**Controlled DC voltage**
Rated voltage $V_{out\ rated}$	**V_{in} – approx. 0.3 V**
Total tolerance	in accordance with the supplying input voltage
Number of output channels	4
Rated current $I_{out\ rated}$	**10 A per channel**
Adjustment range	2 ... 10 A per channel via potentiometer
Parallel switching of several channels	Not permissible
Channel connection	Simultaneous connection of all channels after power up of the supply voltage, delay time of 24 ms or 100 ms adjustable for sequential connection
Efficiency	
Efficiency at $V_{out\ rated}$, $I_{out\ rated}$	Approx. 97 %
Power losses at $V_{out\ rated}$, $I_{out\ rated}$	Approx. 30 W
Switch-off characteristic per channel	
Overcurrent trip	I_{out} = 1.0 ... 1.3 x set value, switch-off after approx. 5 s
Current limit	I_{out} = 1.35 x set value, switch-off after approx. 50 ... 100 ms
Immediate switch-off	I_{out} > set value and V_{in} < 20 V, switch-off after approx. 0.5 ms
Residual current at switch-off	Typ. 20 mA
Reset	Using keys on the module
Protection and monitoring	
Line protection	Electronic; additionally possible via accessible FKS blade-type fuse (equipped when delivered with 15 A fuse) per channel
Status displays	Two-color LED per channel: • Green for output switched through • Red for output switched off • Flashing red LED for switch-off can be reset using the Reset button
Signaling contact	Common signal contact (NO contact, rating 0.5 A/24 V DC)
Safety	In accordance with EN 60950 and EN 50178
Protection class	Class III
Degree of protection (EN 60529)	IP20
CE mark	Yes
UL/cUL (CSA) approval	cULus-listed (UL 508, CSA C22.2 No. 14), File E197259; cURus-recognized (UL 60950, CSA C22.2 No. 60950), File E151273
EMC	
Emitted interference	EN 55022 Class B
Noise immunity	EN 61000-6-2
Operating data	
Ambient temperature range	0 ... +60 °C with natural convection
Transport and storage temperature range	–25 ... +85 °C
Humidity class	Climate class 3K3 according to EN 60721, no condensation

Continued on Page 8/5.

[1] SITOP select is not appropriated for operation on DC UPS module 40 A (6EP1 931-2FC21/-2FC42).

	SITOP select diagnostics module
Type	**Module 4 x 10 A**
Order No.	**6EP1 961-2BA00**
Mechanics	
Connections	
• Input +24 V	2 screw terminals for 0.33 ... 10 mm^2
• Input 0 V	2 screw terminals for 0,22 ... 4 mm^2
• Output 1 ... 4	1 screw terminal each for 0.22 ... 4 mm^2
• Signaling contact	2 screw terminals for 0.22 ... 4 mm^2
Dimensions (W x H x D) in mm	72 x 90 x 90
Weight, approx.	0.4 kg
Assembly	Snaps onto DIN rail EN 60715 35x7.5/15

Characteristics

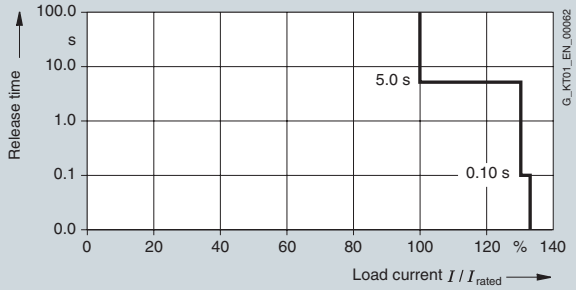

Switch-off characteristic

Circuit diagrams

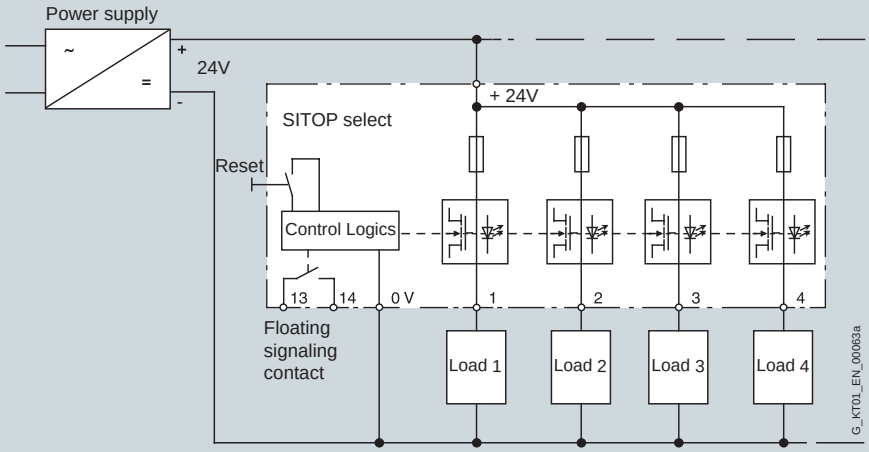

Wiring principle

Overview

90° mounting bracket

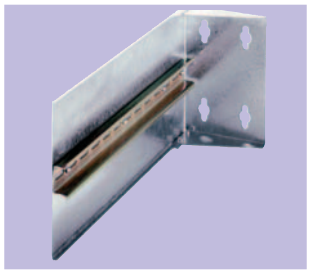

Application

The combination of a SITOP power supply and a 90° mounting bracket results in a minimum surface area requirement on the rear panel of the control cabinet (the width of the power supply becomes the depth, and the depth becomes the width). The mounting bracket is suitable for control cabinets with a depth of 240 or 320 mm or more.

Technical specifications

Mounting bracket	**For a depth of 240 mm**	**For a depth of 320 mm**
Order No.	**6EP1 971-1AA01**	**6EP1 971-2BA00**
Dimensions (W x H x D) in mm	50 x 159 x 236	100 x 150 x 320
Sheet thickness	2 mm	1.5 mm
Mounting rail, attached	Standard mounting rail EN 60715 35x7.5	Standard mounting rail EN 60715 35x15
Weight, approx.	0,9 kg	0,9 kg
Assembly	Can be screwed onto a flat surface (keyhole mounting for hooking onto M5 screws, drill hole distance 147.5 mm height)	Can be screwed onto a flat surface (keyhole mounting for hooking onto M6 screws, drill hole distance 90 mm height, 50 mm side)
Accessories, included	2 M5 combi screws and 2 M5 self-tapping screws	4 M6 combi screws
suitable et al. for	SITOP 24 V/3.5 A (6EP1 332-1SH31) SITOP 24 V/5 A (6EP1 333-1AL12) SITOP 24 V/10 A (6EP1 334-1AL12)	SITOP 24 V/10 A (6EP1 434-2BA00) SITOP 24 V/20 A (6EP1 336-3BA00, 6EP1 436-2BA00, 6EP1 436-3BA00) SITOP 24 V/30 A (6EP1 437-2BA00) SITOP 24 V/40 A (6EP1 337-3BA00, 6EP1 437-2BA10, 6EP1 437-3BA00) SITOP 48 V/20 A (6EP1 457-3BA00)

Mounting adapter for DIN rail and PS-CPU connection comb

The SITOP 24 V/2 A (6ES7 307-1BA00-0AA0, 6ES7 305-1BA80-0AA0), 24 V/5 A (6ES7 307-1EA00-0AA0, 6ES7 307-1EA80-0AA0) and 24 V/10 A (6ES7 307-1KA01-0AA0) single-phase power supplies are special mechanical versions for SIMATIC S7-300.

They can be installed on S7 rails and the connection to the new CPUs or the compact CPUs of the S7-300 can be implemented without problems via the supplied connection comb.

A connection comb for older CPUs with product phase-out since 2003, and a mounting adapter for mounting on standard rail EN 60715 35x15 are available individually as accessories.

Selection and Ordering Data

PS-CPU connection comb (spare part for CPUs 313, 314, 315, 315/316/318-2 DP, IM153)	**6ES7 390-7BA00-0AA0**
Mounting adapter for standard mounting rail EN 60715 35x15	**6ES7 390-6BA00-0AA0**

SITOP 24 V Uninterruptible power supply

9

DC UPS

Overview

By combining a DC UPS module with at least one 24 V battery module and a SITOP power supply unit, longer power failures can be bridged without any interruption.

This combination is used, for example, in machine tool manufacture, the textile industry, all types of production lines and filling systems, and in conjunction with 24 V industrial PCs. This prevents the negative effects which often result from power failures.

For "NON-STOP" use in the event of power failures, Siemens offers the following uninterruptible power supplies
- DC UPS 6 A
- DC UPS 15 A
- DC UPS 40 A

and the following battery modules
- 1.2 Ah (contains lead-acid batteries with corrosion-resistant lead-calcium, high-capacity grid plates and fiberglass mat)
- 3.2 Ah (contains lead-acid batteries with corrosion-resistant lead-calcium, high-capacity grid plates and fiberglass mat)
- 7 Ah (contains lead-acid batteries with corrosion-resistant lead-calcium, high-capacity grid plates and fiberglass mat)
- 12 Ah (contains lead-acid batteries with corrosion-resistant lead-calcium, high-capacity grid plates and fiberglass mat)
- 2.5 Ah (contains "high-temperature battery" lead-acid type)

Selection table for battery modules and mains buffering times

Load current	Battery module 1.2 Ah (6EP1935-6MC01)	Battery module 3.2 Ah (6EP1935-6MD11)	Battery module 7 Ah (6EP1935-6ME21)	Battery module 12 Ah (6EP1935-6MF01)	Battery module 2.5 Ah (6EP1935-6MD31)
1 A	30 min	2.5 h	6 h	11 h	2 h
2 A	11 min	45 min	2.5 h	5 h	45 min
3 A	4 min	25 min	1.5 h	3 h	30 min
4 A	2 min	20 min	45 min	2 h	20 min
6 A	1 min	10 min	30 min	1 h	13 min
8 A	–	4 min	20 min	40 min	9 min
10 A	–	1.5 min	15 min	30 min	7 min
12 A	–	1 min	10 min	25 min	5.5 min
14 A	–	50 s	8 min	20 min	4.5 min
16 A	–	40 s	6 min	15 min	4 min
20 A	–	–	2 min	11 min	–

Important information for selecting the battery capacity:

- The mains buffering times are based on the discharge period of new or non-aged, fully charged battery modules at a battery temperature of not less than +25 °C down to a battery voltage of 21 V (with voltage drops in the DC UPS, approximately 20.4 V DC still remain for the load).

  Battery aging reduces the still available battery capacity up to the end of the service life to typically around 50 % of the original capacity value when new (1.2 Ah or 3.2 Ah or 7 Ah, etc.) and the internal resistance increases. When the message "Battery charge> 85 %" appears, only around 50 % x 85 % = approx. 43 % of the originally available capacity can be assumed at the end of the battery service life.

  At battery temperatures below +25 °C, the available capacity drops by another 30 % at +5 °C battery temperature to approx. 70 % of approx. 43 %. There is then only around 30 % of the original capacity available.

  A significantly larger battery capacity must therefore be selected when configuring the plant: A drop to approx. 50 % is compensated for by selecting 1 / approx. 0.5 = approx. double the battery capacity (required as per the table for the relevant load current and the relevant buffering time).
  Available capacity of approx. 43 % is compensated for by selecting 1 / approx. 0.43 = approx. 2.33 times battery capacity.
  Available capacity of approx. 30 % is compensated for by selecting 1 / approx. 0.3 = approx. 3.33 times battery capacity.

Recommendation:

- Instead of installing double the battery capacity to cope with battery aging, regular battery replacement midway through the expected service life (reduction of capacity to approx. 50 %) can be more advisable for the following reasons: until the halfway point of the expected battery service life (or slightly beyond), capacity does not drop below 100 %. With regular replacement after halfway through expected service life, only single battery capacity (instead of double capacity) must be installed regarding aging (➧ neutral in price with regard to battery module costs but requires only half the space).

  Replacing after half the service life dispenses in particular with the large scatter range of the residual capacity at the end of the service life, which is not accurately defined by battery manufacturers (after the full time, many batteries are above, but many are also below the average 50 % residual capacity, that is, even if double the capacity is installed, the influence of aging at the end of service life is not reliably compensated for, but only typically) ➧ In the case of replacement after half the expected service life, the configured buffering time is maintained significantly more reliably.

  In the case of batteries stored in cool conditions (not exceeding +25 °C) and for not longer than approximately 4 months, the following service life can be assumed, strongly dependent on battery temperature:

Battery temperature	Drop to approx. 50 % of residual capacity	Recommendation: Replace all (with 100 % residual capacity)	Alternative recommendation
+20 °C	4 years	2 years	
+30 °C	2 years	1 year	
+40 °C	1 year	0.5 years	Install double capacity and replace (1 x per year)

  In normal cases (installation in the coolest location in the control cabinet at approx. +30 °C), the battery with single installed battery capacity should be replaced in accordance with the selection table after 1 year of operation!

Overview (continued)

- On the DC UPS module 40 A, at least 2 battery modules from 7 Ah must be switched in parallel. When switching battery modules in parallel, you must ensure identical capacity and aging.
- After a power failure, the battery module is disconnected from the loads at the end of the selected buffering time either automatically or electronically by opening the On/Off control circuit, and as soon as the 24 V input voltage is available again, it is quickly re-charged with the charge current of the relevant DC UPS module (with *I-V* charge characteristic: First constant current *I* for fast charging, and changeover to constant voltage *V* to maintain the charge when the battery is almost full).

DC UPS software

The DC UPS modules are optionally available with a USB port (6 A, 15 A and 40 A) or a serial port (6 A and 15 A). All relevant messages about the status of the DC UPS can be transferred to a PC (e.g. SIMATIC PC) via this interface.

SITOP DC UPS software provides the user with a software tool that is extremely easy to operate and can be used to further process the signals sent from the DC UPS module on the PC. In monitoring mode, the status levels of the DC UPS module are visualized on the PC.
Secure shutdown on power failure and automatic restart of the PC are supported. It is also possible to freely define responses to the different operating states of the DC UPS module, permitting extremely flexible integration into a wide variety of applications.

The software runs under the operating systems Windows NT 4.0, Windows 2000 and Windows XP. It is available as freeware on the SITOP homepage and can be downloaded free of charge.
www.siemens.com/sitop

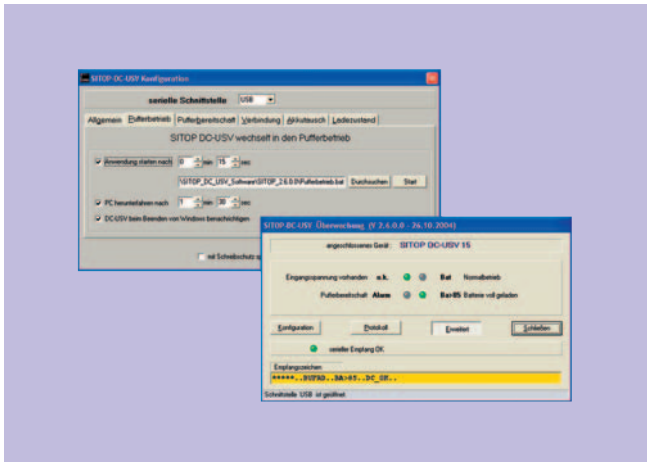

SITOP UPS software monitoring and configuration window

9

DC UPS module 6 A, 15 A and 40 A

Overview

- Compact design, only 50 mm wide (on DC UPS 6 A and DC UPS 15 A) or 102 mm wide (on DC UPS 40 A)
- Simple DIN rail mounting
- Completely uninterruptible mains buffering through immediate electronic connection of the battery as soon as the DC UPS input voltage falls below the value set by means of DIP switches.
- High level of safety and availability through monitoring of operational readiness, battery supply line, battery aging (message "Battery replacement necessary") and battery charge (message "Battery charged to > 85 % of residual capacity available due to aging")
- Support for automatic warm restart of industrial PCs through selectable shutdown characteristics.
- Optionally with serial (6 A and 15 A) or USB port (6 A, 15 A or 40 A).
- SW tool available for download from www.siemens.com/sitop

Integration

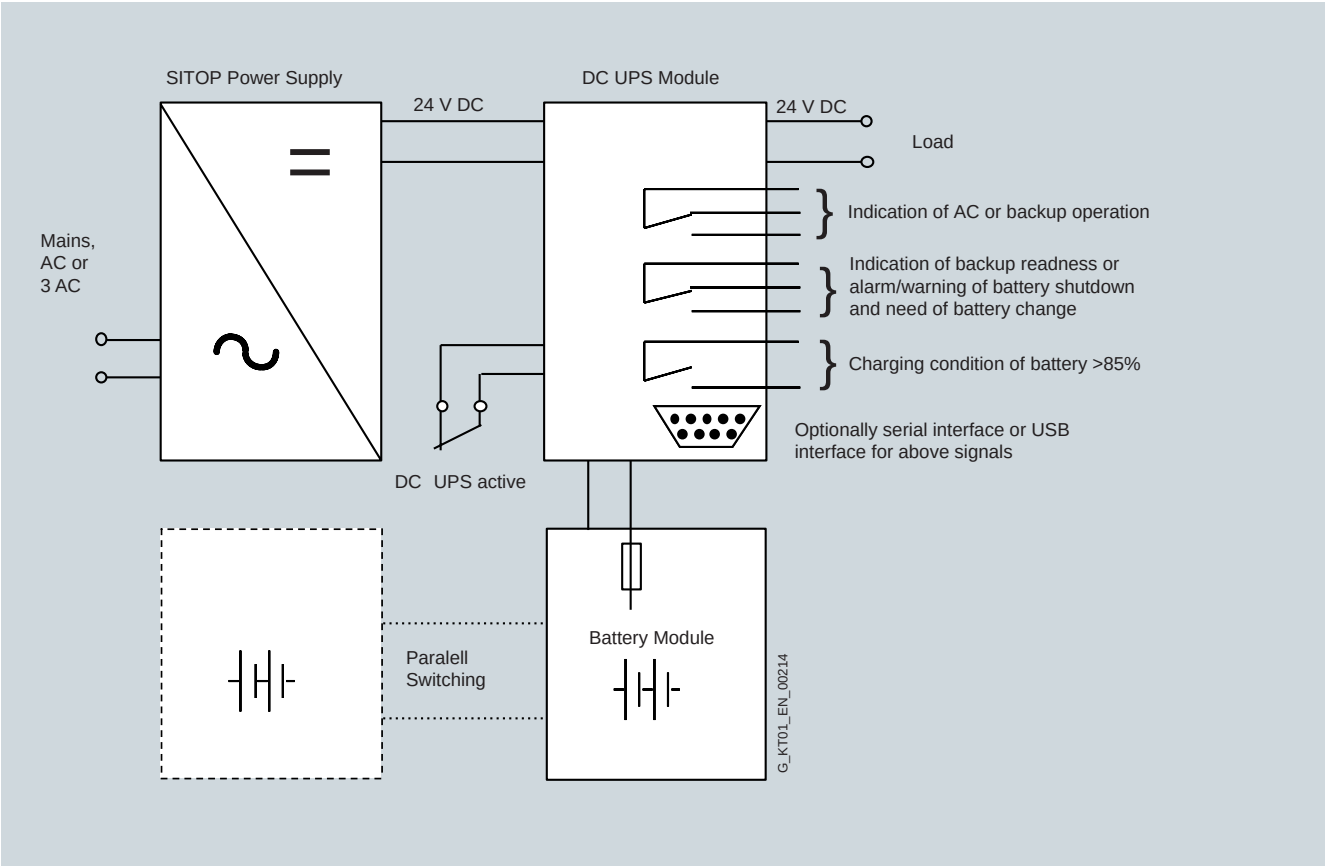

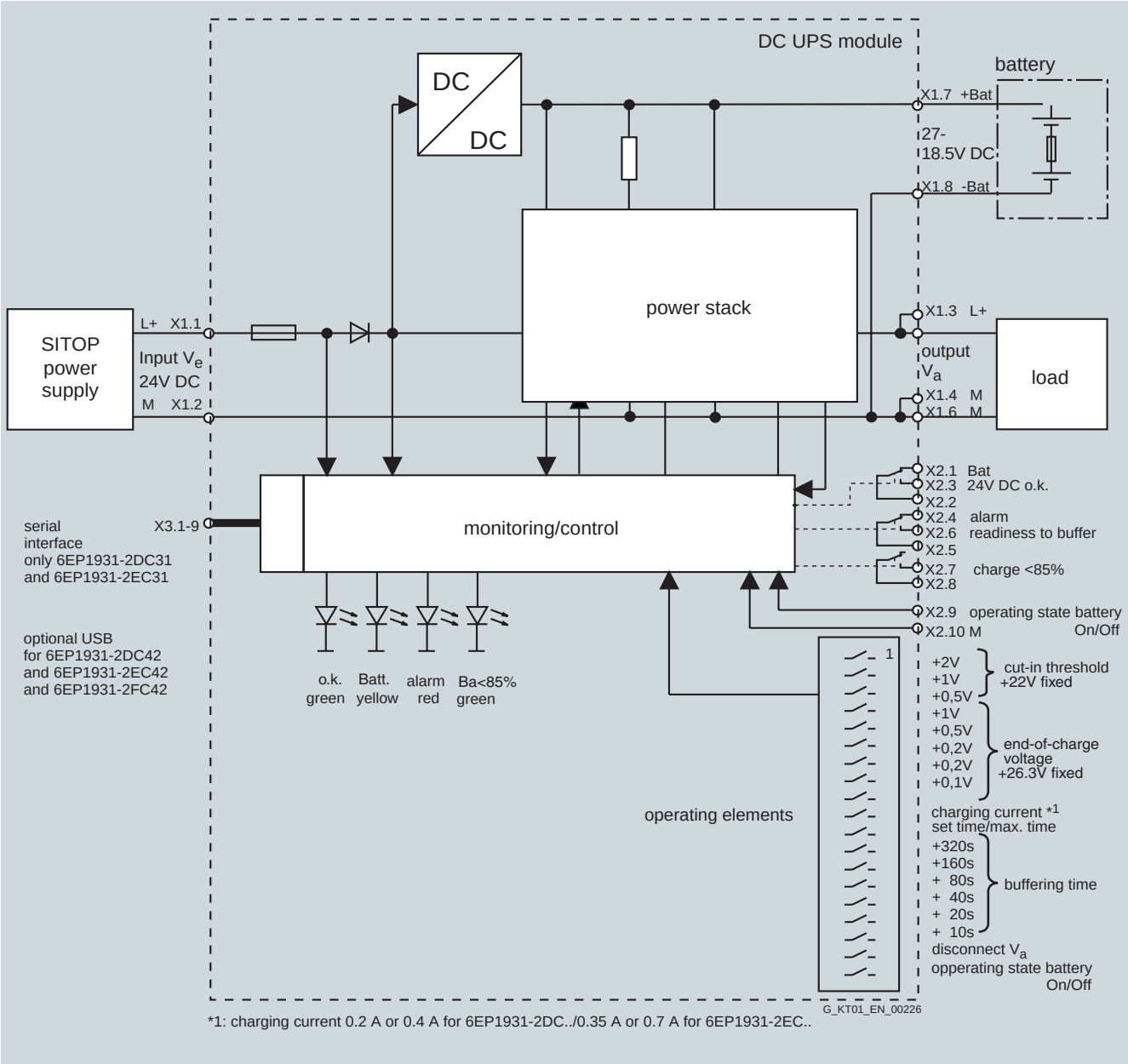

*1: charging current 0.2 A or 0.4 A for 6EP1931-2DC../0.35 A or 0.7 A for 6EP1931-2EC..

Function

The following timing diagrams show examples of the characteristic of the input and output voltage at the terminals of the DC UPS module as well as the signal characteristic of the signals (relays) and of the remote signal (port).

"Long" power failure with DC UPS without serial or USB port
(Fig. 9/1)

Power restoration only once buffer time tp has expired
(t3 follows t4):

Upon failure of the input voltage on the DC UPS module (time t1), the battery "Bat" immediately takes over the DC supply, and the output voltage V_{out} is then retained absolutely without interruption.

The isolated changeover contact "OK/Bat" switches over to its off position "Bat".

At the same point in time t1, the buffer time tp set on the DIP switches is started automatically.

The fact that the DIP switch is set to "Interruption output V_{out}" in this example has no effect because the input voltage returns at time t3 only once the set buffer time (time t4) has expired.

"Short" power failure with DC UPS without serial or USB port
(Fig. 9/2)

Power restoration before buffer time tp has expired
(t3 before t4):

Upon failure of the input voltage on the DC UPS module (time t1), the battery "Bat" immediately takes over the DC supply, and the output voltage V_{out} is then retained absolutely without interruption.

The isolated changeover contact "OK/Bat" switches over to its off position "Bat".

At the same point in time t1, the buffer time tp set on the DIP switches is started automatically.

With the DIP switch set to "Interruption output V_{out}", the output voltage V_{out} is automatically interrupted for 5 s once the set buffer time tp (time t4) has expired.

The battery has already been disconnected because the input voltage has returned at the time t3.

If the DIP switch is not set to "Interruption output V_{out}", there is no interruption in this example because the input voltage has already returned at time t3 prior to expiry of the set buffer time (time t4).

Buffer time (time t4) automatically interrupted for 5 s and the battery, which has not yet been disconnected because of the missing input voltage, is simultaneously disconnected from the output.

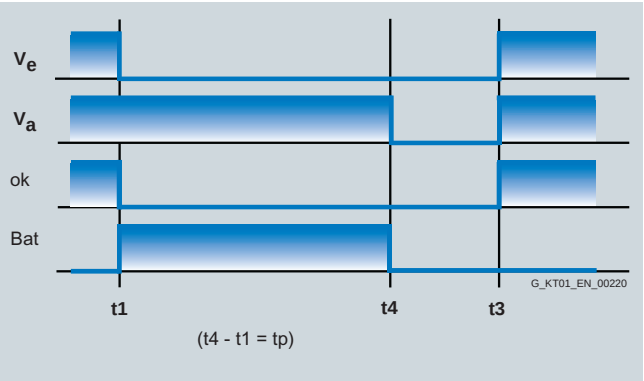

Bild 9/1 "Long power failure"

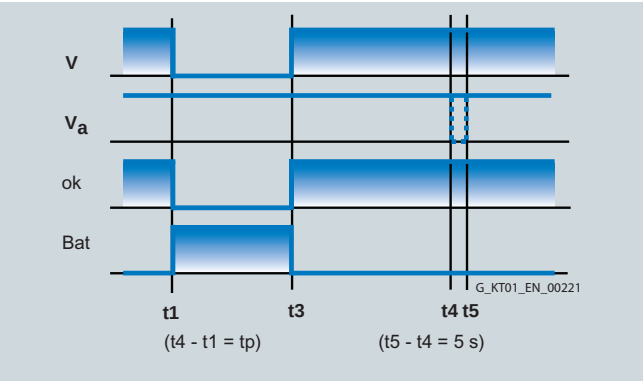

Bild 9/2 "Short power failure"

DC UPS without serial or USB port (6EP1931-2DC21/-2EC21/-2FC21)

DIP switch settings on device: buffer time tp (from 5 s to 635 s with bottom row nos. 2 to 7) /
/ t = according to setting (with bottom row no. 1 to left) / = with setting for interruption V_{out}
(with bottom row no. 8 to left)

Legend:

V_{in}:	Input voltage at terminals X1.1 – X1.2
V_{out}:	Output voltage at terminals X1.3 – X1.4 and X1.5 - X1.6
ok:	Signal for input voltage V_{in} OK or above the set battery connection threshold
Bat:	Signal for battery operation (batteries connected to output, batteries supply the load)
Remote:	Signal for remote timer start with signal level = 0 at pin 7 of 9-pin serial interface (pin 7 is usually the positive power supply for the interface)
t1:	Input voltage V_{in} missing or falls below the set connection threshold
t2:	Buffer time set on DIP switches is started by remote timer start (signal level = 0)
t3:	Input voltage V_{in} rises above set connection threshold
t4:	End of set buffer time (output is switched off and/or battery is disconnected)
t5:	Output is connected again 5 s after shutdown
tp:	Buffer time set on the DIP switches (bottom row nos. 2 to 7)

Function (continued)

"Long" power failure with DC UPS with serial or USB port (Fig. 9/3)

Power restoration only once buffer time tp has expired (t3 follows t4):

Upon failure of the input voltage on the DC UPS module (time t1), the battery "Bat" immediately takes over the DC supply, and the output voltage V_{out} is then retained absolutely without interruption.

The isolated changeover contact "OK/Bat" switches over to its off position "Bat".

The buffer time tp set on the DIP switches is started at the user-selectable time t2 by means of the signal "Remote timer start" (signal level = 0 at pin 7 of the 9-pin serial port following previous signal chart according to operating instructions).

The fact that the DIP switch is set to "Interruption output V_{out}" in this example has no effect because the input voltage returns at time t3 only once the set buffer time (time t4) has expired.

Note: Without a remote signal level = 0 with a setting t = max. duration, there is no interruption to the output voltage in this case because the set buffer time is not started (or interruption only if the exhaustive discharge protection disconnects the battery and the input voltage has not returned by then).

"Short" power failure with DC UPS with serial or USB port (Fig. 9/4)

Power restoration before buffer time tp has expired (t3 before t4):

Upon failure of the input voltage on the DC UPS module (time t1), the battery "Bat" immediately takes over the DC supply, and the output voltage V_{out} is then retained absolutely without interruption.

The isolated changeover contact "OK/Bat" switches over to its off position "Bat".

The buffer time tp set on the DIP switches is started at the user-selectable time t2 by means of the signal "Remote timer start" (signal level = 0 at pin 7 of the 9-pin serial port following previous signal chart according to operating instructions).

With the DIP switch set to "Interruption output V_{out}", the output voltage V_{out} is automatically interrupted for 5 s once the set buffer time tp (time t4) has expired.

The battery has already been disconnected because the input voltage has returned at the time t3.

The interruption to the output voltage V_{out} for 5 s permits an automatic restart for many industrial PCs, even if the line voltage (or the input voltage V_{in} on the DC UPS module) returns during shutdown of the PC, as in this example.

Note: Without a remote signal level = 0 with a setting t = max. duration, there is no interruption in the output voltage here because the set buffer time is not started.

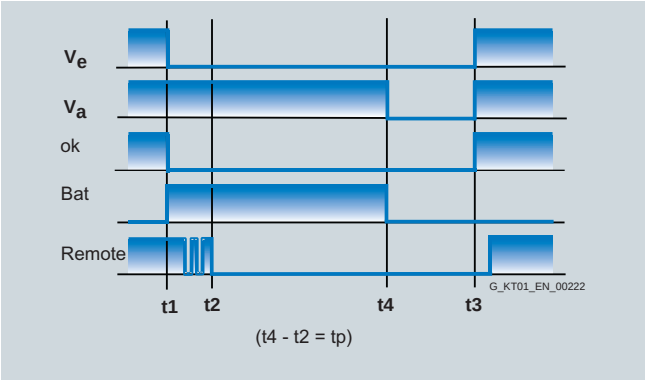

Bild 9/3 "Long power failure"

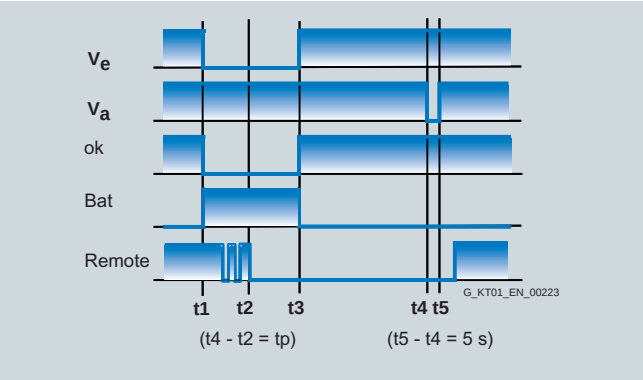

Bild 9/4 "Short power failure"

DC UPS with serial or USB port (6EP1931-2DC31/-2DC42/-2EC31/-2EC42/-2FC42)

DIP switch settings on device: buffer time tp (from 5 s to 635 s with bottom row No. 2 to 7) / / t = max. time (with bottom row No. 1 to right) / interruption of V_{out} (with bottom row No. 8 to left)

Legend:

V_{in}:	Input voltage at terminals X1.1 – X1.2
V_{out}:	Output voltage at terminals X1.3 – X1.4 and X1.5 - X1.6
ok:	Signal for input voltage V_{in} OK or above the set battery connection threshold
Bat:	Signal for battery operation (batteries connected to output, batteries supply the load)
Remote:	Signal for remote timer start with signal level = 0 at pin 7 of 9-pin serial interface (pin 7 is usually the positive power supply for the interface)
t1:	Input voltage V_{in} missing or falls below the set connection threshold
t2:	Buffer time set on DIP switches is started by remote timer start (signal level = 0)
t3:	Input voltage V_{in} rises above set connection threshold
t4:	End of set buffer time (output is switched off and/or battery is disconnected)
t5:	Output is connected again 5 s after shutdown
tp:	Buffer time set on the DIP switches (bottom row nos. 2 to 7)

Technical specifications

	DC UPS module 6 A	DC UPS module 15 A	DC UPS module 40 A
Order No.	**6EP1 931-2DC21** **6EP1 931-2DC31** (with serial port) **6EP1 931-2DC42** (with USB port)	**6EP1 931-2EC21**[1)] **6EP1 931-2EC31** (with serial port) **6EP1 931-2EC42** (with USB port)	**6EP1 931-2FC21** **6EP1 931-2FC42** (with USB port)
Input L+/M in normal operation	Controlled DC voltage	Controlled DC voltage	Controlled DC voltage
Rated voltage $V_{in\ rated}$[2)]	**24 V DC**	**24 V DC**	**24 V DC**
Voltage range	22 ... 29 V DC	22 ... 29 V DC	22 ... 29 V DC
Connection threshold for battery	22.5 V DC ± 0.1 V (factory setting), **adjustable in the range 22 ... 25.5 V DC** (in 0.5 V steps)	22.5 V DC ± 0.1 V (factory setting), **adjustable in the range 22 ... 25.5 V DC** (in 0.5 V steps)	22.5 V DC ± 0.1 V (factory setting), **adjustable in the range 22 ... 25.5 V DC** (in 0.5 V steps)
Rated current $I_{in\ rated}$	6 A + approx. 0.6 A with empty battery	15 A + approx. 1 A with empty battery	40 A + approx. 2.6 A with empty battery
Mains buffering			
Mains buffering or buffer time	Dependent on connected battery and load current, see selection table battery module and mains buffering times as well as the relevant important information notes!		
On/off control circuit	External isolated NO contact required (max. load 15 V DC / max. 10 mA). With an open control circuit, the battery is isolated from output L+, thus canceling mains buffering. If there is no input voltage, a quiescent current of approximately 0.3 mA is drawn from the battery disconnected from the output.		
Methods of setting the buffering time	**Adjustable** using DIP switches to a maximum buffering time up to forced shutdown due to exhaustive discharge protection (at approx. 19 V) or to a time limit of **5 ... 635 s** (in 10 s steps)		
Interruption	**Adjustable** using DIP switch, **either:** • Interruption in output voltage despite returning input voltage for min. 5 s following expiry of set buffer time to support automatic restarting of industrial PCs or • No forced interruption on expiry of the set buffer time		
Output L+/M in normal operation			
Rated voltage $V_{out\ rated}$	**24 V DC** (output voltage of SITOP power supply)	**24 V DC** (output voltage of SITOP power supply)	**24 V DC** (output voltage of SITOP power supply)
Voltage range	Input voltage V_{in} less approx. 0.5 V DC	Input voltage V_{in} less approx. 0.5 V DC	Input voltage V_{in} less approx. 0.5 V DC
Startup delay	Approx. 1 s	Approx. 1 s	Approx. 1 s
Voltage rise	Typ. 60 ms	Typ. 60 ms	Typ. 360 ms
Output current I_{out}	**0 ... 6 A**	**0 ... 15 A**	**0 ... 40 A**
Dynamic current with overload	Electronic current limitation to 1.05 ... 1.4 x $I_{out\ rated}$ for approx. 80 ms, then electronic shutdown of the output with automatic restart attempts (approx. 20 s intervals between restart attempts)		
Dynamic current with short-circuit	Electronic current limitation to 1.5 ... 3 x $I_{out\ rated}$ for approx. 20 ms, then electronic shutdown of the output with automatic restart attempts (approx. 20 s intervals between restart attempts)		
Output L+/M with battery operation			
Rated voltage $V_{out\ rated}$	**24 V DC** (from battery module)	**24 V DC** (from battery module)	**24 V DC** (from battery module)
Approximate voltage range	27 ... 19 V DC at I_{out} = 0.05 x C x 1/h or 24 V at I_{out} = 1 x C x 1/h or 23 V at I_{out} = 2 x C x 1/h (C = total connected battery capacity in Ah), 19 V disconnection threshold for exhaustive discharge protection		
Output current I_{out}[3)]	**0 ... 6 A** (permanently permissible)	**0 ... 15 A** (permanently permissible)	**0 ... 40 A** (permanently permissible)
Dynamic current with overload	Electronic current limitation to 1.05 ... 1.4 x $I_{out\ rated}$ for approx. 80 ms, then latching switch-off of output (restart following return to normal operation)		
Dynamic current with short-circuit	Electronic current limitation to 1.5 ... 3 x $I_{out\ rated}$ for approx. 20 ms, then latching switch-off of output (restart following return to normal operation)		
Output +Bat/-Bat in normal operation	***I-V* charging characteristic** (first constant current *I*, then constant voltage *V*)	***I-V* charging characteristic** (first constant current *I*, then constant voltage *V*)	***I-V* charging characteristic** (first constant current *I*, then constant voltage *V*)
End-of-charge voltage *V*	26.6 V DC ± 0.1 V (factory setting for + 40 °C battery temperature), **adjustable in the range 26.3 ... 29.3 V** (in 0.1 V steps)	26.6 V DC ± 0.1 V (factory setting for + 40 °C battery temperature), **adjustable in the range 26.3 ... 29.3 V** (in 0.1 V steps)	26.6 V DC ± 0.1 V (factory setting for + 40 °C battery temperature), **adjustable in the range 26.3 ... 29.3 V** (in 0.1 V steps)
Load current *I*	Approx. 0.4 A (factory setting), **adjustable to 0.2 A or 0.4 A** (charging is carried out with closed and open on/off circuit) At a battery voltage of < 6 V (batteries defective), charging is not carried out as a protective measure.	Approx. 0.7 A (factory setting), **adjustable to 0.35 A or 0.7 A** (charging is carried out with closed and open on/off circuit) At a battery voltage of < 6 V (batteries defective), charging is not carried out as a protective measure.	Approx. 2 A (factory setting), **adjustable to 1 A or 2 A** (charging is carried out with closed and open on/off circuit) At a battery voltage of < 6 V (batteries defective), charging is not carried out as a protective measure.
Efficiency/power loss			
At $V_{out\ rated}$, $I_{out\ rated}$ approx.	95 % / 7 W	96.2 % / 14 W	97.2 % / 28.6 W
With battery operation, approx.	94.5 % / 8 W	96 % / 15 W	96.9 % / 33.6 W

Continued on Page 9/9

	DC UPS module 6 A	DC UPS module 15 A	DC UPS module 40 A
Protection and monitoring			
Polarity reversal protection	Against polarity reversal on input voltage and batteries	Against polarity reversal on input voltage and batteries	Against polarity reversal on input voltage and batteries
Overload protection	In accordance with "dynamic current with overload" in normal operation (automatic restart attempts) or in battery mode (restart following return to normal operation)		
Short-circuit protection	In accordance with "dynamic current with short-circuit" in normal operation (automatic restart attempts) or in battery mode (restart following return to normal operation). Built-in (not accessible) 16 A fuse (6 A and 15 A on DC UPS module) or 64 A fuse (40 A on DC UPS module).		
Exhaustive discharge protection	Automatic shutdown if battery voltage falls below approx. 19 V. At battery voltage of < 6 V (batteries defective), charging is not carried out as a protective measure		
Monitoring "Wire breakage, battery circuit"	Alarm signal if battery circuit not closed or if it opens during operation (cyclic test approximately every 20 s)		
Monitoring "Battery replacement necessary"	Alarm signal flashing at approx. 0.25 Hz repetition frequency (approx. 2 s alarm, approx. 2 s no alarm, approx. 2 s alarm, etc.). Check every 4 hours with 6 ohm load for 1 s if no buffer mode or switch-off has taken place within 4 hours.	Alarm signal flashing at approx. 0.25 Hz repetition frequency (approx. 2 s alarm, approx. 2 s no alarm, approx. 2 s alarm, etc.). Check every 4 hours with 3 ohm load for 1 s if no buffer mode or switch-off has taken place within 4 hours.	Alarm signal flashing at approx. 0.25 Hz repetition frequency (approx. 2 s alarm, approx. 2 s no alarm, approx. 2 s alarm, etc.). Check every 4 hours with 1 ohm load for 1 s if no buffer mode or switch-off has taken place within 4 hours. No monitoring if switch position of compatibility switch is "On"!
Monitoring "Battery charge > 85 %"	Indication whether batteries are charged to at least 85 % of residual capacity still available depending on aging		
Signaling[4]			
Normal operation	Green LED (o. k.) and isolated changeover contact "24 V DC o. k./Bat" at setting "24 V DC o. k."[5]		
Buffer or battery mode (battery supplies load alone or in addition to PS in the case of overload)	Yellow LED (Bat) and isolated changeover contact "24 V DC o. k. / Bat" at setting "Bat" (= de-energized position)		
Alarm (buffer not ready or prewarning from < 20.4 V battery voltage)	Red LED (alarm) and isolated changeover contact at setting "Alarm" (= de-energized position). Causes of the buffer not being ready during normal operation can include: Off status or open on/off control circuit, battery module not connected, polarity reversal or defective battery (battery voltage < 18.5 V) or wire breakage between battery and UPS module. Scanning and thus updating of the signal every 20 s. Causes for absence of buffer readiness during buffer mode can be: Battery voltage has dropped below 20.4 V DC (= prewarning before shutdown through exhaustive discharge protection) as well as shutdown of the battery due to overload, short-circuit, exhaustive discharge protection or expired backup time. The red LED then goes out.		
"Battery replacement necessary"	Red LED (alarm) flashing at 0.25 Hz and isolated changeover contact (alarm) switching at approx. 0.25 Hz		
"Battery charge > 85 %"	Second green LED (Bat > 85 %) and isolated NO contact closed (de-energized position = open)		
Compatibility switch (only with 6EP1931-2FC21)	–	–	The following can be selected using DIP switches: Switch position "Off" - "significant properties analogous to new DC UPS range" or "On" switch position - "analogous to previous DC UPS module 40 (6EP1931-2FC01)". With compatibility switch in "On" position: Different output of alarm signal: - The red LED flashes on wire-break between rechargeable battery and UPS DC module with $^1/_3$ Hz and isolated changeover contact (alarm) switching at approx. $^1/_3$ Hz. A battery test does not take place

Continued on Page 9/10

DC UPS module 6 A, 15 A and 40 A

	DC UPS module 6 A	DC UPS module 15 A	DC UPS module 40 A
Optional interface and software			
Serial interface	Only on **6EP1 931-2.C31** Output of all alarm signals and receipt of the "Remote Timerstart" signal. Technical design: PC-compatible. 8N1 send and receive, 9600 baud, 8 data bits, 1 stop bit, no parity bit. Required connection to the PC: 1 : 1 interconnected 9-pole sub-D extension cable (connector/socket); only pin 2 (RXD), pin 3 (TDX) and pin 7 (RTS) are required.		–
USB interface	Only on **6EP1 931-2.C42** Output of all alarm signals and receipt of the "Remote Timerstart" signal. Technical design: Specification 2.0 at full speed, i.e. 2 Mbit/s. Supplied with +5 V by DC UPS ("self-powered"). Required connection to the PC: Commercially available 4-core shielded cable, 90 ohm, max. 5 m, USB series "A" connector to PC and USB series "B" connector to DC UPS		
Software	A software tool (runs under Windows NT 4.0, Windows 2000 and Windows XP) for reading out and processing the signals can be downloaded from the Internet at http://www.siemens.com/sitop. Further information about the interface can also be found here.		
Control signals			
On/off control signal	Buffering is terminated or the battery is disconnected from the output by opening the control circuit or by means of DIP switches on the device (DIP switch must be in "Off" position). All other functions are retained.		
"Remote Timerstart" via serial interface or USB	Starts mains buffering for the time set	Starts mains buffering for the time set	Starts mains buffering for the time set
Safety			
Primary/secondary electrical isolation	No	No	No
Protection class	Class III (ext. circuit and power-supply unit: safety extra-low voltage required in accordance with EN 60950)	Class III (ext. circuit and power-supply unit: safety extra-low voltage required in accordance with EN 60950)	Class III (ext. circuit and power-supply unit: safety extra-low voltage required in accordance with EN 60950)
EMC			
Emitted interference	Radio interference suppression in accordance with EN 55022, limit-value curve B	Radio interference suppression in accordance with EN 55022, limit-value curve B	Radio interference suppression in accordance with EN 55022, limit-value curve B
Noise immunity	Noise immunity in accordance with EN 61000-6-2	Noise immunity in accordance with EN 61000-6-2	Noise immunity in accordance with EN 61000-6-2
Environmental conditions			
Ambient temperature during operation	0 ... +60 °C with natural convection	0 ... +60 °C with natural convection	0 ... +60 °C with natural convection
Transport/storage temperature	–40 ... +70 °C	–40 ... +70 °C	–40 ... +70 °C
Degree of protection (EN 60529)	IP20	IP20	IP20
Humidity class	Conditions of use in accordance with EN 60721, climate class 3K3 (relative humidity 5 % ... 85 % and absolute humidity 1 g/m^3 ... 25 g/m^3; no condensation)	Conditions of use in accordance with EN 60721, climate class 3K3 (relative humidity 5 % ... 85 % and absolute humidity 1 g/m^3 ... 25 g/m^3; no condensation)	Conditions of use in accordance with EN 60721, climate class 3K3 (relative humidity 5 % ... 85 % and absolute humidity 1 g/m^3 ... 25 g/m^3; no condensation)
Certifications and approvals			
CE mark	Yes	Yes	Yes
UL/cUL (CSA) approval	cULus-listed (UL 508, CSA C22.2 No. 14) File E197259	cULus-listed (UL 508, CSA C22.2 No. 14) File E197259	cULus-listed (UL 508, CSA C22.2 No. 14) File E197259

Continued on Page 9/11

	DC UPS module 6 A	DC UPS module 15 A	DC UPS module 40 A
Mechanics			
Input connections 24 V DC	2 screw terminals for 1 to 4 mm^2/17 to 11 AWG	2 screw terminals for 1 to 4 mm^2/17 to 11 AWG	2 screw terminals for 0.33 to 10 mm^2/22 to 7 AWG
Output connections 24 V DC	4 screw terminals for 1 to 4 mm^2/17 to 11 AWG	4 screw terminals for 1 to 4 mm^2/17 to 11 AWG	4 screw terminals for 0.33 to 10 mm^2/22 to 7 AWG
Battery module connections 24 V DC	2 screw terminals for 1 to 4 mm^2/17 to 11 AWG	2 screw terminals for 1 to 4 mm^2/17 to 11 AWG	2 screw terminals for 0.33 to 10 mm^2/22 to 7 AWG
Connections for control circuit and alarm signals	10 screw terminals for 0.5 to 2.5 mm^2/20 to 13 AWG	10 screw terminals for 0.5 to 2.5 mm^2/20 to 13 AWG	10 screw terminals for 0.5 to 2.5 mm^2/20 to 13 AWG
Dimensions (W x H x D) in mm	50 x 125 x approx.125	50 x 125 x approx.125	102 x 125 x 125
Required clearances	50 mm above and 50 mm below the device	50 mm above and 50 mm below the device	50 mm above and 50 mm below the device
Weight, approx.	0.4 kg (with serial or USB interface: 0.45 kg)	0.4 kg (with serial or USB interface: 0.45 kg)	1.1 kg (with USB interface: 1.1 kg)
Installation	Snaps onto DIN rail EN 60715 35x7.5/15	Snaps onto DIN rail EN 60715 35x7.5/15	Snaps onto DIN rail EN 60715 35x7.5/15

1) SIPLUS Module 6AG1931-2EC21-2AA0 for extended temperature range -25 to +60 °C and use under medial load (e.g. chlorine sulfur atmosphere).

2) All SITOP 24 V DC power supplies are permissible without restriction

3) Two battery modules connected in parallel are required in order to achieve 40 A

4) Permissible contact rating: 60 V DC/1 A or 30 V AC/1 A

5) "24 V DC o. k." means: Voltage of the power supply unit is greater than the battery connection threshold set on the DC UPS module 40

Battery module 1.2 Ah

Overview

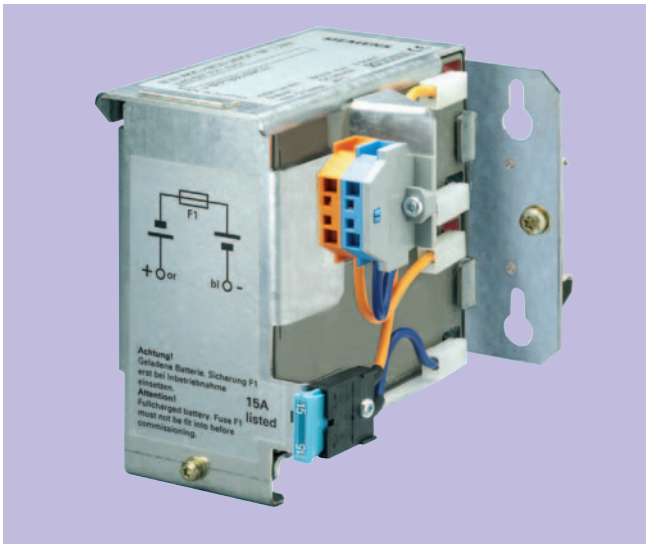

- Battery module for DC UPS module 6 A
- It has two maintenance-free, closed lead-acid batteries (from the same lot), which are installed in a holder and connected in series with corrosion-resistant lead-calcium high-performance grid plates and glass fiber.
- Completely prewired with battery retainer and terminals
- Low self-discharge rate of approximately 3 % per month (at +20 °C)

Technical specifications

	Battery module 1.2 Ah
Order No.	**6EP1 935-6MC01**
Battery type, load current/ load voltage	**Maintenance-free lead-acid batteries**
Recommended end-of-charge voltage (stand-by use), dependent on battery temperature	27.8 V at +10 °C 27.3 V at +20 °C 26.8 V at +30 °C 26.6 V at +40 °C
Recommended load current	Max. 0.3 A
Protection	
Short-circuit protection	Battery fuse 7.5 A/32 V (solid-state-circuitry blade-type fuse + holder)
Battery protection	Valve control
Safety	
Protection class	Class III
UL/cUL (CSA) approval	cURus-recognized (UL 1778, CSA C22.2 No. 107.1), File E219627
Degree of protection (EN 60529)	IP00
Operating data[1]	
Ambient temperature range	+5 ... +40 °C
Transport/storage temperature range	–20 ... +50 °C
Self-discharge rate	Approx. 3 % per month at 20 °C battery temperature (increases with the temperature)
Service life[2]	
The service life of the lead-acid batteries (when capacity falls to 50 % of original capacity) depends on the battery temperature as follows:	approx. 4 years at +20 °C approx. 2 years at +30 °C approx. 1 year at +40 °C
Mechanics	
Connection	1 screw terminal each for 0.08 ... 2.5 mm^2 for +BAT and –BAT
Accessories, included	Accessories pack with solid-state circuitry fuse 7.5 A
Dimensions (W x H x D) in mm	96 x 106 x 108
Weight, approx.	1.8 kg
Installation	Snaps onto DIN rail EN 60715 35x7.5/15 or keyhole mounting for hooking onto M4 screws

[1] For storage, mounting and operation of lead-acid batteries, the relevant DIN/VDE regulations or country-specific regulations (e.g. VDE 0510 Part 2/EN 50272-2) must be observed. You must ensure that the battery site is sufficiently ventilated. Possible sources of ignition must be at least 50 cm away.

[2] Along with the storage and operating temperature, other factors such as the duration of the storage period and the charge status during storage have a decisive influence on the possible useful life. Batteries should therefore be stored as briefly as possible, always fully charged, and within the temperature range 0 to +20 °C.

Overview

- High-temperature battery module for DC UPS module 6 A and 15 A
- It has two maintenance-free, closed lead-acid batteries (from the same lot), which are installed in a holder and connected in series.
- Completely prewired with battery retainer and terminals
- Low self-discharge rate of approximately 3 % per month (at +20 °C)

Technical specifications

	Battery module 2.5 Ah
Order No.	**6EP1 935-6MD31**
Battery type, load current/ load voltage	**Maintenance-free lead-acid batteries**
Recommended end-of-charge voltage (stand-by use), dependent on battery temperature	29.0 V at –10 °C 28.6 V at 0 °C 28.3 V at +10 °C 27.9 V at +20 °C 27.5 V at +30 °C 27.2 V at +40 °C 26.8 V at +50 °C 26.4 V at +60 °C
Recommended load current	Max. 5 A
Protection	
Short-circuit protection	Battery fuse 15 A/32 V (solid-state-circuitry blade-type fuse + holder)
Battery protection	Valve control
Safety	
Protection class	Class III
UL/cUL (CSA) approval	cURus-recognized (UL 1778, CSA C22.2 No. 107.1), File E219627
Degree of protection (EN 60529)	IP00
Operating data[1]	
Ambient temperature range	–40 ... +60 °C with natural convection
Transport/storage temperature range	–40 ... +60 °C
Self-discharge rate	Approx. 3 % per month at 20 °C battery temperature (increases with the temperature)
Service life[2]	
The service life of the pure lead-acid batteries (when capacity falls to 80 % of original capacity) depends on the battery temperature as follows:	approx. 13 years at +20 °C approx. 7 years at +30 °C approx. 3 years at +40 °C approx. 1.5 years at +50 °C approx. 1 year at +60 °C
Mechanics	
Connection	1 screw terminal each for 0.08 ... 2.5 mm^2 for +BAT and –BAT
Accessories, included	Accessories pack with solid-state circuitry fuse 15 A
Dimensions (W x H x D) in mm	265 x 151 x 91
Weight, approx.	3.8 kg
Installation	Snaps onto DIN rail EN 60715 35x7.5/15 or keyhole mounting for hooking onto M4 screws

[1] For storage, mounting and operation of lead-acid batteries, the relevant DIN/VDE regulations or country-specific regulations (e.g. VDE 0510 Part 2/EN 50272-2) must be observed. You must ensure that the battery site is sufficiently ventilated. Possible sources of ignition must be at least 50 cm away.

[2] Along with the storage and operating temperature, other factors such as the duration of the storage period and the charge status during storage have a decisive influence on the possible useful life. Batteries should therefore be stored as briefly as possible, always fully charged, and within the temperature range 0 to +20 °C.

Battery module 3.2 Ah

Overview

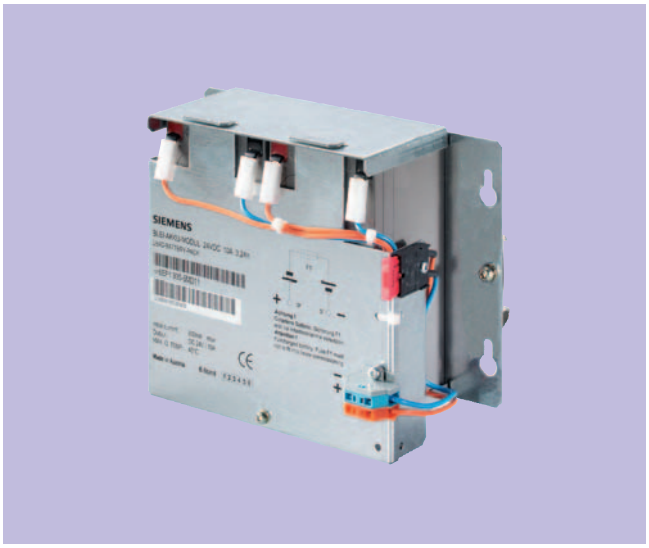

- Battery module for DC UPS module 6 A and 15 A
- It has two maintenance-free, closed lead-acid batteries (from the same lot), which are installed in a holder and connected in series with corrosion-resistant lead-calcium high-performance grid plates and glass fiber.
- Complete with battery retainer and terminals
- Low self-discharge rate of approximately 3 % per month (at +20 °C)

Technical specifications

	Battery module 3.2 Ah
Order No.	**6EP1 935-6MD11**
Battery type, load current/ load voltage	**Maintenance-free, closed lead-acid batteries**
Recommended end-of-charge voltage (stand-by use), dependent on battery temperature	27.8 V at +10 °C 27.3 V at +20 °C 26.8 V at +30 °C 26.6 V at +40 °C
Recommended load current	Max. 0.8 A
Protection	
Short-circuit protection	Battery fuse 15 A/32 V (solid-state-circuitry blade-type fuse + holder)
Battery protection	Valve control
Safety	
Protection class	Class III
UL/cUL (CSA) approval	cURus-recognized (UL 1778, CSA C22.2 No. 107.1), File E219627
Degree of protection (EN 60529)	IP00
Operating data[1]	
Ambient temperature range	+5 ... +40 °C with natural convection
Transport/storage temperature range	–20 ... +50 °C
Self-discharge rate	Approx. 3 % per month at 20 °C battery temperature (increases with the temperature)
Service life[2]	
The service life of the lead-acid batteries (when capacity falls to 50 % of original capacity) depends on the battery temperature as follows:	approx. 4 years at +20 °C approx. 2 years at +30 °C approx. 1 year at +40 °C
Mechanics	
Connection	1 screw terminal each for 0.08 ... 2.5 mm^2 for +BAT and –BAT
Accessories, included	Accessories pack with solid-state circuitry fuse 15 A
Dimensions (W x H x D) in mm	190 x 151 x 82
Weight, approx.	3.2 kg
Installation	Snaps onto DIN rail EN 60715 35x7.5/15 or keyhole mounting for hooking onto M4 screws

[1] For storage, mounting and operation of lead-acid batteries, the relevant DIN/VDE regulations or country-specific regulations (e.g. VDE 0510 Part 2/EN 50272-2) must be observed. You must ensure that the battery site is sufficiently ventilated. Possible sources of ignition must be at least 50 cm away.

[2] Along with the storage and operating temperature, other factors such as the duration of the storage period and the charge status during storage have a decisive influence on the possible useful life. Batteries should therefore be stored as briefly as possible, always fully charged, and within the temperature range 0 to +20 °C.

Overview

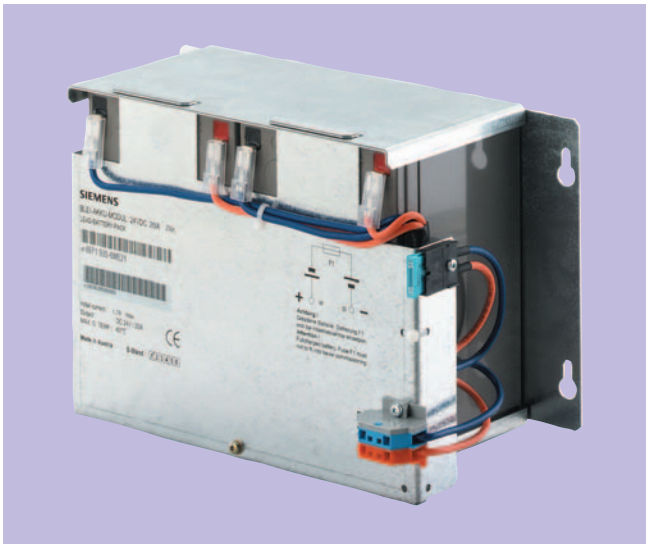

- Battery module for DC UPS module 6 A, 15 A, and 40 A
- It has two maintenance-free, closed lead-acid batteries (from the same lot), which are installed in a holder and connected in series with corrosion-resistant lead-calcium high-performance grid plates and glass fiber.
- Completely prewired with terminals and battery retainer
- Low self-discharge rate of approximately 3 % per month (at +20 °C)

Technical specifications

	Battery module 7 Ah
Order No.	**6EP1 935-6ME21**
Battery type, load current/ load voltage	**Maintenance-free, closed lead-acid batteries**
Recommended end-of-charge voltage (stand-by use), dependent on battery temperature	27.8 V at +10 °C 27.3 V at +20 °C 26.8 V at +30 °C 26.6 V at +40 °C
Recommended load current	Max. 1.75 A
Protection	
Short-circuit protection	Battery fuse 20 A/32 V (solid-state-circuitry blade-type fuse + holder)
Battery protection	Valve control
Safety	
Protection class	Class III
UL/cUL (CSA) approval	cURus-recognized (UL 1778, CSA C22.2 No. 107.1), File E219627
Degree of protection (EN 60529)	IP00
Operating data[1]	
Ambient temperature	+5 ... +40 °C
Transport and storage temperature range	–20 ... +50 °C
Self-discharge rate	Approx. 3 % per month at 20 °C battery temperature
Service life[2]	
The service life of the lead-acid batteries (when capacity falls to 50 % of original capacity) depends on the battery temperature as follows:	approx. 4 years at +20 °C approx. 2 years at +30 °C approx. 1 year at +40 °C
Mechanics	
Connection	1 screw terminal each for 0.08 ... 4 mm^2 for +BAT and –BAT
Accessories, included	Accessories pack with solid-state circuitry replacement fuse 15 A and 20 A
Dimensions (W x H x D) in mm	186 x 168 x 121
Weight, approx.	6.0 kg
Installation	Can be screwed onto flat surface ("keyhole mounting" for hooking onto M4 screws)

[1] For storage, mounting and operation of lead-acid batteries, the relevant DIN/VDE regulations or country-specific regulations (e.g. VDE 0510 Part 2/EN 50272-2) must be observed. You must ensure that the battery site is sufficiently ventilated. Possible sources of ignition must be at least 50 cm away.

[2] Along with the storage and operating temperature, other factors such as the duration of the storage period and the charge status during storage have a decisive influence on the possible useful life. Batteries should therefore be stored as briefly as possible, always fully charged, and within the temperature range 0 to +20 °C.

Battery module 12 Ah

Overview

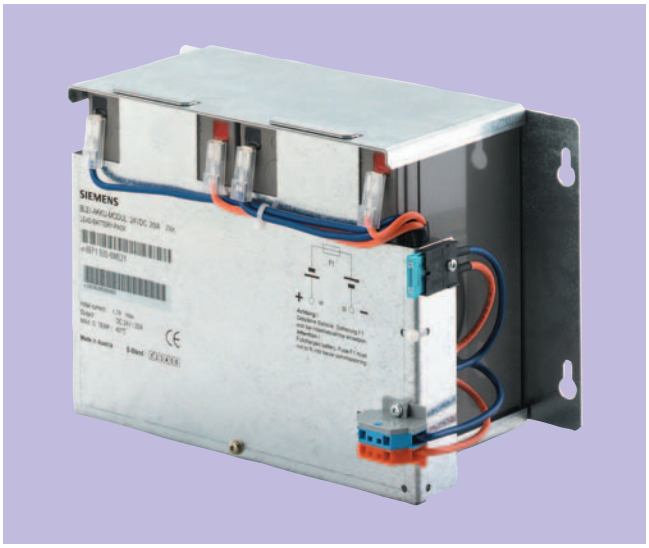

- Battery module for DC UPS module 6 A and 15 A and DC UPS module 40 A (for > 20 to 40 A, 2 modules are required in parallel)
- It has two maintenance-free, closed lead-acid batteries (from the same lot), which are installed in a holder and connected in series with corrosion-resistant lead-calcium high-performance grid plates and glass fiber.
- Completely prewired with terminals and battery retainer
- Low self-discharge rate of approximately 3 % per month (at +20 °C)

Technical specifications

	Battery module 12 Ah
Order No.	**6EP1 935-6MF01**
Battery type, load current/ load voltage	**Maintenance-free, closed lead-acid batteries**
Recommended end-of-charge voltage (stand-by use), dependent on battery temperature	27.8 V at +10 °C 27.3 V at +20 °C 26.8 V at +30 °C 26.6 V at +40 °C
Recommended load current	Max. 3 A
Protection	
Short-circuit protection	Battery fuse 20 A/32 V (solid-state-circuitry blade-type fuse + holder)
Battery protection	Valve control
Safety	
Protection class	Class III
UL/cUL (CSA) approval	cURus-recognized (UL 1778, CSA C22.2 No. 107.1), File E219627
Degree of protection (EN 60529)	IP00
Operating data[1]	
Ambient temperature	+5 ... +40 °C
Transport and storage temperature range	–20 ... +50 °C
Self-discharge rate	Approx. 3 % per month at 20 °C battery temperature
Service life[2]	
The service life of the lead-acid batteries (when capacity falls to 50 % of original capacity) depends on the battery temperature as follows:	approx. 4 years at +20 °C approx. 2 years at +30 °C approx. 1 year at +40 °C
Mechanics	
Connection	1 screw terminal each for 0.08 ... 4 mm^2 for +BAT and –BAT
Accessories, included	Accessories pack with solid-state circuitry fuse 15 A and 20 A
Dimensions (W x H x D) in mm	253 x 168 x 121
Weight, approx.	9.0 kg
Installation	Can be screwed onto flat surface ("keyhole mounting" for hooking onto M4 screws)

[1] For storage, mounting and operation of lead-acid batteries, the relevant DIN/VDE regulations or country-specific regulations (e.g. VDE 0510 Part 2/EN 50272-2) must be observed. You must ensure that the battery site is sufficiently ventilated. Possible sources of ignition must be at least 50 cm away.

[2] Along with the storage and operating temperature, other factors such as the duration of the storage period and the charge status during storage have a decisive influence on the possible useful life. Batteries should therefore be stored as briefly as possible, always fully charged, and within the temperature range 0 to +20 °C.

SITOP
Alternative voltages

10

Overview

	SITOP power flexi 125 W	SITOP power dual 15 V
		

Application

	The power supply with flexible output voltage from 3 to 57 V; suitable for all application areas requiring a special voltage other than 24 V.	The industrial power supply with two 15 V outputs that can be switched in parallel and in series; can be used, for example, to supply electronic loads with ±15 V.

Technical specifications

Power supply, type	**3-57 V/2-10 A**	**2 x 15 V/3.5 A**
Order No.	**6EP1 353-2BA00**	**6EP1 353-0AA00**
Input	Single-phase AC	Single-phase AC
Rated voltage $V_{in\ rated}$	**120/230 V AC** Set via wire jumper	**120 to 230 V AC** wide-range input
Voltage range	85 ... 132 V/170 ... 264 V AC	93 ... 264 V AC
Overvoltage resistance	2.3 x $V_{in\ rated}$, 1.3 ms	Surge voltage in accordance with EN 61000-6-2 Table 4
Mains buffering at $I_{out\ rated}$	> 10 ms at V_{in} = 93/187 V (P_{out} = 120 W)	> 10/40 ms at V_{in} = 120/187 V
Rated line frequency; rated line-frequency range	50/60 Hz, 47 ... 63 Hz	50/60 Hz, 47 ... 63 Hz
Rated current $I_{in\ rated}$	2.2/0.9 A	1.9-1.15 A
Switch-on current limit (+25 °C)	< 32 A	< 30 A, typ. 3 ms
I^2t	< 0.8 A^2s	< 3 A^2s
Built-in line-side fuse	T 3,15 A/250 V (not accessible)	T4 A/250 V (not accessible)
Recommended miniature circuit breaker (IEC 898) in the mains power input	From 6 A, Characteristic C	At and above 10 A characteristic C or at and above 16 A characteristic B
Output	Controlled, isolated DC voltage	Controlled, isolated DC voltage
Rated voltage $V_{out\ rated}$	**3-57 V DC**	**2 x 15 V DC**
Total tolerance	±1 %	±2 %
• Static mains compensation	Approx. 0.1 %	Approx. 0.2 %
• Static load smoothing	Approx. 0.2 %	Approx. 0.2 %
Sense line connection	Yes, maximum voltage control 0.5 V per line	–
Residual ripple	< 50 mV_{pp} (typ. 20 mV_{pp})	< 50 mV_{pp} (typ. 20 mV_{pp})
Spikes (bandwidth: 20 MHz)	< 100 mV_{pp} (typ. 80 mV_{pp})	< 150 mV_{pp}
Adjustment range	3 ... 57 V, via potentiometer or analog control voltage signal 0 ... 2.5 V	14,5 ... 17 V
Status display	Green LED for 24 V OK	Green LED for V_{out} >10 V (summation display)
Signaling	Power good via relay contact, current monitor signal 0 ... 2.5 V	–
Response on activation/deactivation	No overshoot of V_{out} (soft start)	Overshoot of V_{out} <3 %
Startup delay/voltage rise	< 3 s/typ. 80 ms	< 1 s/–
Rated current $I_{out\ rated}$	**2-10 A** (approx. 125 W)	**2 x 3.5 A**
Current range		
• Up to +45 °C	0 ... 10 A (approx. 125 W)	2 x 0 to 3.5 A
• Up to +60 °C	0 ... 10 A (approx. 125 W)	2 x 0 to 2.5 A

Continued on page 10/3.

	SITOP power flexi 125 W	SITOP power dual 15 V
Power supply, type	**3-57 V/2-10 A**	**2 x 15 V/3.5 A**
Order No.	**6EP1 353-2BA00**	**6EP1 353-0AA00**
Dynamic overcurrent on		
• Power-up on short-circuit	Constant current 2 ... 10 A	
• Short-circuit during operation	Constant current 2 ... 10 A	
Parallel switching for enhanced performance	Yes, 2 units	Yes, 2 units
Efficiency		
Efficiency at $V_{out\ rated}$, $I_{out\ rated}$	Approx. 84 % (at 24 V/5 A)	Approx. 80 %
Power loss at $V_{out\ rated}$, $I_{out\ rated}$	approx. 23 W (at 24 V/5 A)	Approx. 27 W
Protection and monitoring		
Output overvoltage protection	Yes, acc. to EN 60950	Yes, acc. to EN 60950
Current limit	2 ... 10 A, adjustable using potentiometer or analog control voltage signal 0 ... 2.5 V	Limit point < 4.9 A; switch-off point < 6 A
Short-circuit protection	Electronic current limiting (2 ... 10 A) in the range 3 ... 12 V or power limiting (approx. 125 W) in the range 12 ... 57 V	Electronic shutdown, automatic restart
Overload/short-circuit indicator	Red LED for current or power limiting	-
Safety		
Primary/secondary electrical isolation	Yes, safety extra-low output voltage V_{out} to EN 60950 and EN 50178	Yes, safety extra-low output voltage V_{out} to EN 60950
Protection class	Class I	Class I
Leakage current	< 3.5 mA	< 3.5 mA
German Technical Inspectorate approval	Yes	–
CE mark	Yes	Yes
UL/cUL (CSA) approval	cULus-listed (UL 508, CSA C22.2 No. 142), File E143289	cULus-listed (UL 508, CSA C22.2 No. 142), File E179336
Degree of protection (EN 60529)	IP20	IP20
EMC		
Emitted interference	EN 55022 Class B	EN 55011 Class A
Supply-harmonics limitation	EN 61000-3-2	–
Noise immunity	EN 61000-6-2	EN 61000-6-2
Operating data		
Ambient temperature range	0 ... +60 °C with natural convection	0 ... +60°C with natural convection, derating from +45°C
Transport/storage temperature range	–25 ... +85 °C	–40 ... +70 °C
Humidity class	Climate class 3K3 to EN 60721	Climate class 3K3 to EN 60721
Mechanics		
Connections		
• Supply input L1, N, PE	One screw terminal each for 0.5 ... 2.5 mm² single-core/ finely stranded	One screw terminal each for 0.5 ... 2.5 mm² single-core/ finely stranded
• Output	1 screw terminal for 0.5 ... 2.5 mm² (L+) and 2 screw terminals for 0.5 ... 2.5 mm² (M)	1 screw terminal each for 0.5 ... 2.5 mm² (P15_1, GND1, GDN2) and 2 screw terminals for 0.5 ... 2.5 mm² (P15_2)
• Message signals, control inputs	Screw terminals for 0.14 ... 1.5 mm²	–
Dimensions (W x H x D) in mm	75 x 125 x 125	75 x 125 x 125
Weight, approx.	0.9 kg	0.75 kg
Installation	Snaps onto DIN rail EN 60715 35x7.5/15	Snaps onto DIN rail EN 60715 35x7.5/15
Accessories	–	–

Overview

SITOP smart 48 V/10 A

SITOP modular 48 V/20 A

Application

The three-phase 48 V power supply for powerful loads that are supplied with double the usual 24 V; with wide-range input; slim design; 50 % extra power for 5 s.

The modular 48 V power supply for powerful loads that are supplied with double the usual 24 V; with wide-range input and switchable output characteristic; function expansion possible with add-on module.

Technical specifications

Power supply, type	**48 V/10 A**	**48 V/20 A**
Order No.	**6EP1 456-2BA00**	**6EP1 457-3BA00**
Input		
Rated voltage $V_{in\ rated}$	Three-phase AC **400-500 V 3 AC** wide-range input	Three-phase AC **400-500 V 3 AC** wide-range input
Voltage range	360 ... 550 V[1]	320 ... 550 V (startup from V_{in} > 340 V)
Overvoltage resistance	2.3 x $V_{in\ rated}$, 1.3 ms	2.3 x $V_{in\ rated}$, 1.3 ms
Mains buffering at $I_{out\ rated}$	> 7 ms at V_{in} = 400 V	> 6 ms at V_{in} = 400 V
Rated line frequency; rated line-frequency range	50/60 Hz, 47 ... 63 Hz	50/60 Hz, 47 ... 63 Hz
Rated current $I_{in\ rated}$	1.1 ... 0.9 A	2.2 A (V_{in} = 400 V)
Switch-on current limit (+25 °C)	< 18 A	< 70 A
I^2t	< 0.8 A^2s	< 2.8 A^2s
Built-in line-side fuse	No	No
Necessary fuse protection in the mains power input	3-pole-linked miniature circuit-breaker 6 ... 16 A Characteristic C or motor-protection switch 3RV1021-1DA10, setting 3 A or 3RV1721-1DD10 (UL 489)	3-pole-linked miniature circuit-breaker 10 ... 16 A Characteristic C or motor-protection switch 3RV1021-1DA10, setting 3 A or 3RV1721-1DD10 (UL 489)
Output	Controlled, isolated DC voltage	Controlled, isolated DC voltage
Rated voltage $V_{out\ rated}$	**48 V DC**	**48 V DC**
Total tolerance	±3 %	±3 %
• Static mains compensation	Approx. 0.1 %	Approx. 0.1 %
• Static load smoothing	Approx. 0.2 %	Approx. 0.2 %
Sense line connection	–	–
Residual ripple	< 350 mV_{pp}	< 100 mV_{pp} (typ. 10 mV_{pp})
Spikes (bandwidth: 20 MHz)	< 240 mV_{pp}	< 200 mV_{pp} (typ. 80 mV_{pp})
Adjustment range	42 ... 56 V (max. 480 W)	42 ... 56 V (max. 960 W)
Status display	Green LED for 48 V OK	Green LED for 48 V OK
Signaling	Power good via relay contact (NO contact, rating 60 V/0.3 A) for output voltage OK	Possible via signaling module (6EP1 961-3BA10)
Response on activation/deactivation	No overshoot of V_{out} (soft start)	No overshoot of V_{out} (soft start)
Startup delay/voltage rise	< 2.5 s/< 500 ms	< 2.5 s/typ. 20 ms
Rated current $I_{out\ rated}$	**10 A**	**20 A**
Current range		
• Up to +45 °C	0 ... 10 A	0 ... 20 A
• Up to +60 °C	0 ... 10 A	0 ... 20 A

Continued on Page 10/5

[1] 320 ... 575 V voltage range available soon

	SITOP smart 48 V/10 A	SITOP modular 48 V/20 A
Power supply, type	**48 V/10 A**	**48 V/20 A**
Order No.	**6EP1 456-2BA00**	**6EP1 457-3BA00**
Dynamic overcurrent on		
• Power-up on short-circuit	Constant current approx. 11 A	Constant current approx. 23 A
• Short-circuit during operation	Typ. 15 A for 5 s/min	Typ. 60 A for 25 ms
Parallel switching for enhanced performance	Yes, 2 units	Yes, 2 units
Efficiency		
Efficiency at $V_{out\ rated}$, $I_{out\ rated}$	Approx. 93 %	Approx. 90 %
Power loss at $V_{out\ rated}$, $I_{out\ rated}$	Approx. 36 W	Approx. 106 W
Protection and monitoring		
Output overvoltage protection	Yes, acc. to EN 60950	Yes, acc. to EN 60950
Current limit	Typ. 11 A, overload capability 150 % $I_{out\ rated}$ up to 5 s/min	Typ. 23 A
Short-circuit protection	Constant current characteristic approx. 11 A	Optional constant current characteristic approx. 23 A or latching shutdown
Overload/short-circuit indicator	–	Yellow LED for "overload", red LED for "latching shutdown"
Safety		
Primary/secondary electrical isolation	Yes, safety extra-low output voltage V_{out} to EN 60950 and EN 50178	Yes, safety extra-low output voltage V_{out} to EN 60950
Protection class	Class I	Class I
Leakage current	< 3.5 mA	< 3.5 mA (typ. 0.68 mA)
German Technical Inspectorate approval	Yes	Yes
CE mark	Yes	Yes
UL/cUL (CSA) approval	cULus-listed (UL 508, CSA C22.2 No. 14), File E197259	cULus-listed (UL 508, CSA C22.2 No. 14), File E197259; cCSAus (CSA C22.2 No. 107.1, No. 60950, UL 60950)
Degree of protection (EN 60529)	IP20	IP20
EMC		
Emitted interference	EN 55022 Class B	EN 55022 Class B
Supply-harmonics limitation	EN 61000-3-2	EN 61000-3-2
Noise immunity	EN 61000-6-2	EN 61000-6-2
Operating data		
Ambient temperature range	0 ... +60 °C with natural convection	0 ... +60 °C with natural convection
Transport/storage temperature range	–25 ... +85 °C	–25 ... +85 °C
Humidity class	Climate class 3K3 to EN 60721	Climate class 3K3 to EN 60721
Mechanics		
Connections		
• Supply input L1, L2, L3, PE	One screw terminal each for 0.2 ... 4 mm^2 single-core/ finely stranded	One screw terminal each for 0.2 ... 4 mm^2 single-core/ finely stranded
• Output	1 screw terminal each for 0.2 ... 4 mm^2 (+, –)	2 screw terminals each for 0.33 ... 10 mm^2 (+, –)
• Message signals, control inputs	2 screw terminals for 0.2 ... 4 mm^2 (relay contact 13, 14)	–
Dimensions (W x H x D) in mm	70 x 125 x 125	240 x 125 x 125
Weight, approx.	1.2 kg	3.2 kg
Installation	Snaps onto DIN rail EN 60715 35x7.5/15	Snaps onto DIN rail EN 60715 35x7.5/15
Accessories	–	Signaling module (6EP1961-3BA10)

Notes

SITOP customized power supplies

11

Customized power supplies

Overview

Our well-proven standard power supplies cannot, of course, satisfy the requirements of every application. Does your application require a voltage other than 24 V, a 19" rack or open-frame variant, or do the ambient conditions for your system extend beyond the normal range? We offer you the opportunity to optimize your system to application-specific requirements.

The experience and know-how of our development team enables us to offer you a tailor-made solution by means of a modular power supply concept. In this way, your specific requirements are satisfied by modifying existing devices or with completely new developments based on previously developed standard components. The benefits for you are clear:

- Adaptation of the power supply to your application and not, as before, vice-versa
- Considerable flexibility in the electrical parameters
- AC or DC input
- Several output voltages are possible
- High reliability using standard components
- Variability with regard to constructional requirements
- Adaptable mechanical system

You benefit from the expertise of large-scale production and gain maximum development security and quality. Further important criteria for the market success of your application are:

- High availability through fast development cycles
- Short time span between development and start of series production thanks to a routine manufacturing introduction procedure
- Market-based pricing

Our customer-specific solutions are used today in many sectors of mechanical engineering, in automation technology, vehicle electronics, equipment manufacturing and in industrial instrumentation technology.

Our offer is fundamentally open to every application case. If we have awakened your interest or if you would like to receive further details, please complete the fax form with the parameters of your specific application profile and fax it back to us. You will also find the form on the Internet at:

www.siemens.com/sitop

You can fill it out on the screen and send it back to us immediately. We will then contact you as soon as possible.

FAX response

Specification sheet for customized power supplies

Fax recipient:

SIEMENS AG
Industry Sector
IA SE PS 1
Würzburger Straße 121
90766 Fürth, Germany

FAX: 0049-911 750-9991

Fax sender:

Company: _____

Department: _____

Name: _____

Location: _____

FAX: _____

Phone: _____

Application/operating range:

Electrical requirements:

Input voltage: V_{in}: _____ Tolerance ΔV_{in} : _____

Frequency: f_{in}: _____ Tolerance Δf_{in} : _____

Mains buffering time: T_{in}: _____

Output voltage: V_{out1}: _____ V_{out2}: _____ V_{out3}: _____ V_{out4}: _____

Output currents: I_{out1}: _____ I_{out2}: _____ I_{out3}: _____ I_{out4}: _____

Other: _____

_____

Mechanical requirements:

Design/dimensions:
(enclose drawing where appropriate) _____ Housing: _____

Ports: _____ Other: _____

General requirements:

Efficiency: _____

Ambient temperature: _____ Signaling: _____

Relevant standards: ☐ EN 60950 ☐ UL ☐ cUL (CSA) _____

☐ EN 61000-6-1/2 ☐ EN 61000-6-3/4

☐ _____

Quantity per annum: _____ Start of delivery: _____

Suggested price: _____

Remark: _____

_____

_____

_____

_____

Notes

LOGO!Power

12

LOGO!Power 5 V

Overview

Application

The power supplies of the LOGO!Power range are primary switched-mode devices that are optimally matched to the LOGO! logic modules in their functionality and design. With the wide-range input 85 V to 264 V AC, radio interference level B and option for installing in built-in miniature distribution boards, they can be used universally in a diverse range of applications in the low-end performance range.

Technical specifications

Power supply, type	**5 V/3 A**	**5 V/6.3 A**
Order No.	**6EP1 311-1SH02**	**6EP1 311-1SH12**
Input	Single-phase AC	Single-phase AC
Rated voltage $V_{in\ rated}$	**100 - 240 V AC**	**100 - 240 V AC**
	Wide-range input	Wide-range input
Voltage range	85 ... 264 V AC	85 ... 264 V AC
Overvoltage resistance	2.3 x $V_{in\ rated}$/1.3 ms	2.3 x $V_{in\ rated}$/1.3 ms
Mains buffering at $I_{out\ rated}$	> 40 ms at V_{in} = 187 V	> 40 ms at V_{in} = 187 V
Rated line frequency, rated line-frequency range	50/60 Hz, 47 ... 63 Hz	50/60 Hz, 47 ... 63 Hz
Rated current $I_{in\ rated}$	0.36 ... 0.22 A	0.71 ... 0.37 A
Switch-on current limit (+25 °C)	< 15 A	< 30 A
I^2t	< 0.8 A^2s	< 3 A^2s
Built-in line-side fuse	Internal	Internal
Recommended miniature circuit breaker (IEC 898) in the mains power input	From 16 A, Characteristic B or from 10 A, Characteristic C	From 16 A, Characteristic B or from 10 A, Characteristic C
Output	Controlled, isolated DC voltage	Controlled, isolated DC voltage
Rated voltage $V_{out\ rated}$	**5 V DC**	**5 V DC**
Total tolerance, static	±3 %	±3 %
• Static mains compensation	Approx. 0.2 %	Approx. 0.1 %
• Static load smoothing	Approx. 1.5 %	Approx. 2 %
Residual ripple	< 100 mV_{pp} (typ. 10 mV_{pp})	< 100 mV_{pp} (typ. 15 mV_{pp})
Spikes (bandwidth approx. 20 MHz)	< 100 mV_{pp} (typ. 30 mV_{pp})	< 100 mV_{pp} (typ. 30 mV_{pp})
Adjustment range	4,6 ... 5,4 V	4,6 ... 5,4 V
Status display	Green LED for output voltage OK	Green LED for output voltage OK
Response on activation/deactivation	No overshoot of V_{out} (soft start)	No overshoot of V_{out} (soft start)
Startup delay/ voltage rise	< 0.5 s/typ. 15 ms	< 0.5 s/typ. 10 ms
Rated current $I_{out\ rated}$	**3 A**	**6.3 A**
Current range to +55 °C	0 ... 3 A	0 ... 6.3 A
Parallel switching for enhanced performance	Yes	Yes

Continued on page 12/3.

LOGO!Power 5 V

Power supply, type	5 V/3 A	5 V/6.3 A
Order No.	**6EP1 311-1SH02**	**6EP1 311-1SH12**
Efficiency		
Efficiency at $V_{out\ rated}$, $I_{out\ rated}$	Approx. 76 %	Approx. 83 %
Power losses at $V_{out\ rated}$, $I_{out\ rated}$	Approx. 5 W	Approx. 6 W
Closed-loop control		
Dyn. mains compensation ($V_{in\ rated}$ ± 15 %)	<0.2 % V_{out}	<0.2 % V_{out}
Dynamic load smoothing (I_{out}: 10/90/10 %)	Typ. ± 4 % V_{out}	Typ. ± 6.5 % V_{out}
Load step settling time		
• 10 to 90 %	Typ. 20 ms	Typ. 20 ms
• 90 to 10 %	Typ. 20 ms	Typ. 20 ms
Protection and monitoring		
Current limit	Typ. 3.8 A	Typ. 8.2 A
Short-circuit protection	Constant current characteristic	Constant current characteristic
Sustained short-circuit current rms value	< 5 A	< 10 A
Overload/short-circuit indicator	–	–
Safety		
Primary/secondary electrical isolation	Yes, safety extra-low output voltage V_{out} to EN 60950 and EN 50178	Yes, safety extra-low output voltage V_{out} to EN 60950 and EN 50178
Protection class	Class II (without protective conductor)	Class II (without protective conductor)
German Technical Inspectorate approval	Yes; CB scheme	Yes; CB scheme
CE mark	Yes	Yes
UL/cUL (CSA) approval	cULus-listed (UL 508, CSA C22.2 No. 14), File E197259; cURus-recognized (UL 60950, CSA C22.2 No. 60950), File E151273	cULus-listed (UL 508, CSA C22.2 No. 14), File E197259; cURus-recognized (UL 60950, CSA C22.2 No. 60950), File E151273
FM approval	Class I Div. 2, Group A, B, C, D, T4	Class I Div. 2, Group A, B, C, D, T4
Marine approval	GL	GL
Degree of protection (EN 60529)	IP20	IP20
EMC		
Emitted interference	EN 55022 Class B	EN 55022 Class B
Supply-harmonics limitation	Not applicable	Not applicable
Noise immunity	EN 61000-6-2	EN 61000-6-2
Operating data		
Ambient temperature range	– 20 ... + 55 °C with natural convection	– 20 ... + 55 °C with natural convection
Transport/storage temperature range	– 40 ... + 70 °C	– 40 ... + 70 °C
Humidity class	Climate class 3K3 to EN 60721, no condensation	Climate class 3K3 to EN 60721, no condensation
Mechanics		
Supply-input connections L1, N	One screw terminal each for 0.5 ... 2.5 mm^2 single-core/ finely stranded	One screw terminal each for 0.5 ... 2.5 mm^2 single-core/ finely stranded
Connections		
• Output +	2 screw terminals for	2 screw terminals for
• Output –	0.5 ... 2.5 mm^2	0.5 ... 2.5 mm^2
Dimensions (W x H x D) in mm	54 x 90 x 55	72 x 90 x 55
Weight, approx.	0.17 kg	0.25 kg
Installation	Snaps onto DIN rail EN 60715 35x7.5/15	Snaps onto DIN rail EN 60715 35x7.5/15

LOGO!Power 12 V

Overview

Application

The power supplies of the LOGO!Power range are primary switched-mode devices that are optimally matched to the LOGO! logic modules in their functionality and design. With the wide-range input 85 V to 264 V AC, radio interference level B and option for installing in built-in miniature distribution boards, they can be used universally in a diverse range of applications in the low-end performance range.

Technical specifications

Power supply, type	**12 V/1.9 A**	**12 V/4.5 A**
Order No.	**6EP1 321-1SH02**	**6EP1 322-1SH02**
Input	Single-phase AC	Single-phase AC
Rated voltage $V_{in\ rated}$	**100 - 240 V AC**	**100 - 240 V AC**
	Wide-range input	Wide-range input
Voltage range	85 ... 264 V AC	85 ... 264 V AC
Overvoltage resistance	2.3 x $V_{in\ rated}$/1.3 ms	2.3 x $V_{in\ rated}$/1.3 ms
Mains buffering at $I_{out\ rated}$	> 40 ms at V_{in} = 187 V	> 40 ms at V_{in} = 187 V
Rated line frequency, rated line-frequency range	50/60 Hz, 47 ... 63 Hz	50/60 Hz, 47 ... 63 Hz
Rated current $I_{in\ rated}$	0.53 ... 0.3 A	1.13 ... 0.61 A
Switch-on current limit (+25 °C)	< 15 A	< 30 A
I^2t	< 0.8 A^2s	< 3 A^2s
Built-in line-side fuse	Internal	Internal
Recommended miniature circuit breaker (IEC 898) in the mains power input	From 16 A, Characteristic B or from 10 A, Characteristic C	From 16 A, Characteristic B or from 10 A, Characteristic C
Output	Controlled, isolated DC voltage	Controlled, isolated DC voltage
Rated voltage $V_{out\ rated}$	**12 V DC**	**12 V DC**
Total tolerance, static	±3 %	±3 %
• Static mains compensation	Approx. 0.2 %	Approx. 0.1 %
• Static load smoothing	Approx. 1.5 %	Approx. 1.5 %
Residual ripple	< 200 mV_{pp} (typ. 10 mV_{pp})	< 200 mV_{pp} (typ. 10 mV_{pp})
Spikes (bandwidth approx. 20 MHz)	< 300 mV_{pp} (typ. 30 mV_{pp})	< 300 mV_{pp} (typ. 40 mV_{pp})
Adjustment range	10.5 ... 16.1 V	10,5 ... 16,1 V
Status display	Green LED for output voltage OK	Green LED for output voltage OK
Response on activation/deactivation	No overshoot of V_{out} (soft start)	No overshoot of V_{out} (soft start)
Startup delay/ voltage rise	< 0.5 s/typ. 15 ms	< 0.5 s/typ. 10 ms
Rated current $I_{out\ rated}$	**1.9 A**	**4.5 A**
Current range to +55 °C	0 ... 1.9 A	0 ... 4.5 A
Parallel switching for enhanced performance	Yes	Yes

Continued on page 12/5.

LOGO!Power 12 V

Power supply, type	12 V/1.9 A	12 V/4.5 A
Order No.	**6EP1 321-1SH02**	**6EP1 322-1SH02**
Efficiency		
Efficiency at $V_{out\ rated}$, $I_{out\ rated}$	Approx. 80 %	Approx. 85 %
Power losses at $V_{out\ rated}$, $I_{out\ rated}$	Approx. 5 W	Approx. 10 W
Closed-loop control		
Dyn. mains compensation ($V_{in\ rated}$ ± 15 %)	<0.2 % V_{out}	<0.2 % V_{out}
Dynamic load smoothing (I_{out}: 10/90/10 %)	Typ. ± 3 % V_{out}	Typ. ± 4.2 % V_{out}
Load step settling time		
• 10 to 90 %	Typ. 20 ms	Typ. 20 ms
• 90 to 10 %	Typ. 20 ms	Typ. 20 ms
Protection and monitoring		
Current limit	Typ. 2.5 A	Typ. 5.9 A
Short-circuit protection	Constant current characteristic	Constant current characteristic
Sustained short-circuit current rms value	< 4 A	< 8 A
Overload/short-circuit indicator	–	–
Safety		
Primary/secondary electrical isolation	Yes, safety extra-low output voltage V_{out} to EN 60950 and EN 50178	Yes, safety extra-low output voltage V_{out} to EN 60950 and EN 50178
Protection class	Class II (without protective conductor)	Class II (without protective conductor)
German Technical Inspectorate approval	Yes; CB scheme	Yes; CB scheme
CE mark	Yes	Yes
UL/cUL (CSA) approval	cULus-listed (UL 508, CSA C22.2 No. 14), File E197259; cURus-recognized (UL 60950, CSA C22.2 No. 60950), File E151273	cULus-listed (UL 508, CSA C22.2 No. 14), File E197259; cURus-recognized (UL 60950, CSA C22.2 No. 60950), File E151273
FM approval	Class I Div. 2, Group A, B, C, D T4	Class I Div. 2, Group A, B, C, D T4
Marine approval	GL, ABS	GL, ABS
Degree of protection (EN 60529)	IP20	IP20
EMC		
Emitted interference	EN 55022 Class B	EN 55022 Class B
Supply-harmonics limitation	Not applicable	Not applicable
Noise immunity	EN 61000-6-2	EN 61000-6-2
Operating data		
Ambient temperature range	– 20 ... + 55 °C with natural convection	– 20 ... + 55 °C with natural convection
Transport/storage temperature range	– 40 ... + 70 °C	– 40 ... + 70 °C
Humidity class	Climate class 3K3 to EN 60721, no condensation	Climate class 3K3 to EN 60721, no condensation
Mechanics		
Connections		
• Supply input L1, N	One screw terminal each for 0.5 ... 2.5 mm^2 single-core/ finely stranded	One screw terminal each for 0.5 ... 2.5 mm^2 single-core/ finely stranded
• Output +		
• Output –	2 screw terminals for 0.5 ... 2.5 mm^2	2 screw terminals for 0.5 ... 2.5 mm^2
Dimensions (W x H x D) in mm	54 x 90 x 55	72 x 90 x 55
Weight, approx.	0.17 kg	0.25 kg
Installation	Snaps onto DIN rail EN 60715 35x7.5/15	Snaps onto DIN rail EN 60715 35x7.5/15

LOGO!Power 15 V

Overview

Application

The power supplies of the LOGO!Power range are primary switched-mode devices that are optimally matched to the LOGO! logic modules in their functionality and design. With the wide-range input 85 V to 264 V AC, radio interference level B and option for installing in built-in miniature distribution boards, they can be used universally in a diverse range of applications in the low-end performance range.

Technical specifications

Power supply, type	**15 V/1.9 A**	**15 V/4 A**
Order No.	**6EP1 351-1SH02**	**6EP1 352-1SH02**
Input	Single-phase AC	Single-phase AC
Rated voltage $V_{in\ rated}$	**100 - 240 V AC**	**100 - 240 V AC**
	Wide-range input	Wide-range input
Voltage range	85 ... 264 V AC	85 ... 264 V AC
Overvoltage strength	2.3 x $V_{in\ rated}$/1.3 ms	2.3 x $V_{in\ rated}$/1.3 ms
Mains buffering at $I_{out\ rated}$	> 40 ms at V_{in} = 187 V	> 40 ms at V_{in} = 187 V
Rated line frequency, rated line-frequency range	50/60 Hz, 47 ... 63 Hz	50/60 Hz, 47 ... 63 Hz
Rated current $I_{in\ rated}$	0.63 ... 0.33 A	1.24 ... 0.68 A
Switch-on current limit (+25 °C)	< 15 A	< 30 A
I^2t	< 0.8 A^2s	< 3 A^2s
Built-in line-side fuse	Internal	Internal
Recommended miniature circuit breaker (IEC 898) in the mains power input	From 16 A, Characteristic B or from 10 A, Characteristic C	From 16 A, Characteristic B or from 10 A, Characteristic C
Output	Controlled, isolated DC voltage	Controlled, isolated DC voltage
Rated voltage $V_{out\ rated}$	**15 V DC**	**15 V DC**
Total tolerance, static	±3 %	±3 %
• Static mains compensation	Approx. 0.1 %	Approx. 0.1 %
• Static load smoothing	Approx. 1.5 %	Approx. 1.5 %
Residual ripple	< 200 mV_{pp} (typ. 10 mV_{pp})	< 200 mV_{pp} (typ. 10 mV_{pp})
Spikes (bandwidth approx. 20 MHz)	< 300 mV_{pp} (typ. 30 mV_{pp})	< 300 mV_{pp} (typ. 40 mV_{pp})
Adjustment range	10.5 ... 16.1 V	10,5 ... 16,1 V
Status display	Green LED for output voltage OK	Green LED for output voltage OK
Response on activation/deactivation	No overshoot of V_{out} (soft start)	No overshoot of V_{out} (soft start)
Startup delay/ voltage rise	< 0.5 s/typ. 15 ms	< 0.5 s/typ. 10 ms
Rated current $I_{out\ rated}$	**1.9 A**	**4 A**
Current range to +55 °C	0 ... 1.9 A	0 ... 4 A
Parallel switching for enhanced performance	Yes	Yes

Continued on page 12/7.

LOGO!Power 15 V

Power supply, type	15 V/1.9 A	15 V/4 A
Order No.	**6EP1 351-1SH02**	**6EP1 352-1SH02**
Efficiency		
Efficiency at $V_{out\ rated}$, $I_{out\ rated}$	Approx. 80 %	Approx. 85 %
Power losses at $V_{out\ rated}$, $I_{out\ rated}$	Approx. 7 W	Approx. 11 W
Closed-loop control		
Dyn. mains compensation ($V_{in\ rated}$ ± 15 %)	<0.2 % V_{out}	<0.2 % V_{out}
Dynamic load smoothing (I_{out}: 10/90/10 %)	Typ. ± 2.8 % V_{out}	Typ. ± 3.3 % V_{out}
Load step settling time		
• 10 to 90 %	Typ. 20 ms	Typ. 20 ms
• 90 to 10 %	Typ. 20 ms	Typ. 20 ms
Protection and monitoring		
Current limit	Typ. 2.7 A	Typ. 5.0 A
Short-circuit protection	Constant current characteristic	Constant current characteristic
Sustained short-circuit current rms value	< 4 A	< 8 A
Overload/short-circuit indicator	–	–
Safety		
Primary/secondary electrical isolation	Yes, safety extra-low output voltage V_{out} to EN 60950 and EN 50178	Yes, safety extra-low output voltage V_{out} to EN 60950 and EN 50178
Protection class	Class II (without protective conductor)	Class II (without protective conductor)
German Technical Inspectorate approval	Yes; CB scheme	Yes; CB scheme
CE mark	Yes	Yes
UL/cUL (CSA) approval	cULus-listed (UL 508, CSA C22.2 No. 14), File E197259; cURus-recognized (UL 60950, CSA C22.2 No. 60950), File E151273	cULus-listed (UL 508, CSA C22.2 No. 14), File E197259; cURus-recognized (UL 60950, CSA C22.2 No. 60950), File E151273
FM approval	Class I Div. 2, Group A, B, C, D T4	Class I Div. 2, Group A, B, C, D T4
Marine approval	GL	GL
Degree of protection (EN 60529)	IP20	IP20
EMC		
Emitted interference	EN 55022 Class B	EN 55022 Class B
Supply-harmonics limitation	Not applicable	Not applicable
Noise immunity	EN 61000-6-2	EN 61000-6-2
Operating data		
Ambient temperature range	– 20 ... + 55 °C with natural convection	– 20 ... + 55 °C with natural convection
Transport/storage temperature range	– 40 ... + 70 °C	– 40 ... + 70 °C
Humidity class	Climate class 3K3 to EN 60721, no condensation	Climate class 3K3 to EN 60721, no condensation
Mechanics		
Supply-input connections L1, N	One screw terminal each for 0.5 ... 2.5 mm^2 single-core/finely stranded	One screw terminal each for 0.5 ... 2.5 mm^2 single-core/finely stranded
Connections		
• Output +	2 screw terminals for 0.5 ... 2.5 mm^2	2 screw terminals for 0.5 ... 2.5 mm^2
• Output –		
Dimensions (W x H x D) in mm	54 x 90 x 55	72 x 90 x 55
Weight, approx.	0.17 kg	0.25 kg
Installation	Snaps onto DIN rail EN 60715 35x7.5/15	Snaps onto DIN rail EN 60715 35x7.5/15

LOGO!Power 24 V

Overview

Application

The power supplies of the LOGO!Power range are primary switched-mode devices that are optimally matched to the LOGO! logic modules in their functionality and design. With the wide-range input 85 V to 264 V AC, radio interference level B and option for installing in built-in miniature distribution boards, they can be used universally in a diverse range of applications in the low-end performance range.

Technical specifications

Power supply, type	**24 V/1.3 A**	**24 V/2.5 A**	**24 V/4 A**
Order No.	**6EP1 331-1SH02**	**6EP1 332-1SH42**	**6EP1 332-1SH51**
Input Rated voltage $V_{in\ rated}$ Voltage range	Single-phase AC **100 - 240 V AC** Wide-range input 85 ... 264 V AC	Single-phase AC **100 - 240 V AC** Wide-range input 85 ... 264 V AC	Single-phase AC **100 - 240 V AC** Wide-range input 85 ... 264 V AC
Overvoltage resistance	2.3 x $V_{in\ rated}$/1.3 ms	2.3 x $V_{in\ rated}$/1.3 ms	2.3 x $V_{in\ rated}$/1.3 ms
Mains buffering at $I_{out\ rated}$ Rated line frequency, rated line-frequency range Rated current $I_{in\ rated}$ Switch-on current limit (+25 °C)	> 40 ms at V_{in} = 187 V 50/60 Hz, 47 ... 63 Hz 0.7 ... 0.35 A < 15 A	> 40 ms at V_{in} = 187 V 50/60 Hz, 47 ... 63 Hz 1.22 ... 0.66 A < 30 A	> 40 ms at V_{in} = 187 V 50/60 Hz, 47 ... 63 Hz 1.95 ... 0.97 A < 30 A
I^2t Built-in line-side fuse Recommended miniature circuit breaker (IEC 898) in the mains power input	< 0.8 A^2s Internal From 16 A, Characteristic B or from 10 A, Characteristic C	< 3 A^2s Internal From 16 A, Characteristic B or from 10 A, Characteristic C	< 2.5 A^2s Internal From 16 A, Characteristic B or from 10 A, Characteristic C
Output Rated voltage $V_{out\ rated}$ Total tolerance, static • Static mains compensation • Static load smoothing	Controlled, isolated DC voltage **24 V DC** ±3 % Approx. 0.1 % Approx. 1.5 %	Controlled, isolated DC voltage **24 V DC** ±3 % Approx. 0.1 % Approx. 1.5 %	Controlled, isolated DC voltage **24 V DC** ±3 % Approx. 0.1 % Approx. 1.5 %
Residual ripple Spikes (bandwidth approx. 20 MHz) Adjustment range Status display Response on activation/deactivation	< 200 mV_{pp} (typ. 10 mV_{pp}) < 300 mV_{pp} (typ. 20 mV_{pp}) 22.2 ... 26.4 V Green LED for output voltage OK No overshoot of V_{out} (soft start)	< 200 mV_{pp} (typ. 10 mV_{pp}) < 300 mV_{pp} (typ. 40 mV_{pp}) 22.2 ... 26.4 V Green LED for output voltage OK No overshoot of V_{out} (soft start)	< 200 mV_{pp} (typ. 10 mV_{pp}) < 300 mV_{pp} (typ. 80 mV_{pp}) 22,2 ... 26,4 V Green LED for output voltage OK No overshoot of V_{out} (soft start)
Startup delay/ voltage rise Rated current $I_{out\ rated}$ Current range up to +55 C Parallel switching for enhanced performance	< 0.5 s/typ. 15 ms **1.3 A** 0 ... 1.3 A Yes	< 0.5 s/typ. 10 ms **2.5 A** 0 ... 2.5 A Yes	< 0.5 s/typ. 35 ms **4 A** 0 ... 4 A Yes

Continued on page 12/9.

		LOGO!Power 24 V	
Power supply, type	**24 V/1.3 A**	**24 V/2.5 A**	**24 V/4 A**
Order No.	**6EP1 331-1SH02**	**6EP1 332-1SH42**	**6EP1 332-1SH51**
Efficiency			
Efficiency at $V_{out\ rated}$, $I_{out\ rated}$	Approx. 82 %	Approx. 87 %	Approx. 89 %
Power losses at $V_{out\ rated}$, $I_{out\ rated}$	Approx. 7 W	Approx. 9 W	Approx. 12 W
Closed-loop control			
Dyn. mains compensation ($V_{in\ rated}$ ± 15 %)	<0.2 % V_{out}	<0.2 % V_{out}	<0.2 % V_{out}
Dynamic load smoothing (I_{out}: 10/90/10 %)	Typ. ± 1.5 % V_{out}	Typ. ± 1.5 % V_{out}	Typ. ± 1.5 % V_{out}
Load step settling time			
10 to 90 %	Typ. 20 ms	Typ. 20 ms	Typ. 20 ms
90 to 10 %	Typ. 20 ms	Typ. 20 ms	Typ. 20 ms
Protection and monitoring			
Current limit	Typ. 2 A	Typ. 3.4 A	Typ. 4.7 A
Short-circuit protection	Constant current characteristic	Constant current characteristic	Constant current characteristic
Sustained short-circuit current rms value	< 4 A	< 8 A	< 10 A
Overload/short-circuit indicator	–	–	–
Safety			
Primary/secondary electrical isolation	Yes, safety extra-low output voltage V_{out} to EN 60950 and EN 50178	Yes, safety extra-low output voltage V_{out} to EN 60950 and EN 50178	Yes, safety extra-low output voltage V_{out} to EN 60950 and EN 50178
Protection class	Class II (without protective conductor)	Class II (without protective conductor)	Class II (without protective conductor)
German Technical Inspectorate approval	Yes; CB scheme	Yes; CB scheme	Yes; CB scheme
CE mark	Yes	Yes	Yes
UL/cUL (CSA) approval	cULus-listed (UL 508, CSA C22.2 No. 14), File E197259; cURus-recognized (UL 60950, CSA C22.2 No. 60950), File E151273	cULus-listed (UL 508, CSA C22.2 No. 14), File E197259; cURus-recognized (UL 60950, CSA C22.2 No. 60950), File E151273	cULus-listed (UL 508, CSA C22.2 No. 14), File E197259; cURus-recognized (UL 60950, CSA C22.2 No. 60950), File E151273
FM approval	Class I Div. 2, Group A, B, C, D T4	Class I Div. 2, Group A, B, C, D T4	Class I Div. 2, Group A, B, C, D T4
Marine approval	GL, ABS	GL, ABS	GL, ABS
Degree of protection (EN 60529)	IP20	IP20	IP20
EMC			
Emitted interference	EN 55022 Class B	EN 55022 Class B	EN 55022 Class B
Supply-harmonics limitation	Not applicable	Not applicable	EN 61000-3-2
Noise immunity	EN 61000-6-2	EN 61000-6-2	EN 61000-6-2
Operating data			
Ambient temperature range	– 20 ... + 55 °C with natural convection	– 20 ... + 55 °C with natural convection	– 20 ... + 55 °C with natural convection
Transport/storage temperature range	– 40 ... + 70 °C	– 40 ... + 70 °C	– 40 ... + 70 °C
Humidity class	Climate class 3K3 to EN 60721, no condensation	Climate class 3K3 to EN 60721, no condensation	Climate class 3K3 to EN 60721, no condensation
Mechanics			
Supply-input connections L1, N	One screw terminal each for 0.5 ... 2.5 mm^2 single-core/ finely stranded	One screw terminal each for 0.5 ... 2.5 mm^2 single-core/ finely stranded	One screw terminal each for 0.5 ... 2.5 mm^2 single-core/ finely stranded
Connections			
• Output +	2 screw terminals	2 screw terminals	2 screw terminals
• Output –	for 0.5 ... 2.5 mm^2	for 0.5 ... 2.5 mm^2	for 0.5 ... 2.5 mm^2
Dimensions (W x H x D) in mm	54 x 90 x 55	72 x 90 x 55	90 x 90 x 55
Weight, approx.	0.17 kg	0.25 kg	0.34 kg
Installation	Snaps onto DIN rail EN 60715 35x7.5/15	Snaps onto DIN rail EN 60715 35x7.5/15	Snaps onto DIN rail EN 60715 35x7.5/15

Notes

SITOP PSA 100E

13

Output currents 2.5 to 12 A

Output current 2,5 to 12 A

Overview

SITOP PSA 100E

Application

The single-phase SITOP PSA 100E power supplies with their compact, narrow formats are optimally tailored to standard requirements in the industrial environment. The rugged metal housing supports flexible mounting either on standard rails or directly on a wall, and removable terminals make electrical connection easy.

Technical specifications

Power supply, type	**24 V/2.5 A**	**24 V/4 A**	**24 V/6 A**
Order No.	**6EP1 232-1AA00**	**6EP1 232-1AA10**	**6EP1 233-1AA00**
Input Rated voltage $V_{in\ rated}$ Voltage range	Single-phase AC **230 V AC** 187 ... 264 V AC	Single-phase AC **230 V AC** 187 ... 264 V AC	Single-phase AC **230 V AC** 187 ... 264 V AC
Overvoltage resistance	–	–	–
Mains buffering at $I_{out\ rated}$	> 10 ms	> 10 ms	> 10 ms
Rated line frequency; rated line-frequency range	50/60 Hz; 47 ... 63 Hz	50/60 Hz; 47 ... 63 Hz	50/60 Hz; 47 ... 63 Hz
Rated current $I_{in\ rated}$ Switch-on current limit (+ 25 °C)	0.65 A < 30 A	1.1 A < 30 A	1.4 A < 35 A
I^2t Built-in line-side fuse Recommended miniature circuit breaker (IEC 898) in the mains power input	< 0.8 A^2s Internal From 6 A, Characteristic C	< 0.8 A^2s Internal From 6 A, Characteristic C	< 1.2 A^2s Internal From 10 A, Characteristic C
Output Rated voltage $V_{out\ rated}$ Total tolerance • Static mains compensation • Static load smoothing	Controlled, isolated DC voltage **24 V DC** ±3 % Approx. 0.1 % Approx. 0.5 %	Controlled, isolated DC voltage **24 V DC** ±3 % Approx. 0.1 % Approx. 0.5 %	Controlled, isolated DC voltage **24 V DC** ±3 % Approx. 0.1 % Approx. 0.5 %
Residual ripple Spikes (bandwidth: 20 MHz) Adjustment range Status display Response on activation/deactivation	< 150 mV_{pp} < 250 mV_{pp} 23 ... 26 V Green LED for output voltage OK Overshoot of V_{out} < 1 %	< 150 mV_{pp} < 250 mV_{pp} 23 ... 26 V Green LED for output voltage OK Overshoot of V_{out} < 1 %	< 150 mV_{pp} < 250 mV_{pp} 23 ... 26 V Green LED for output voltage OK Overshoot of V_{out} < 5 %
Startup delay/voltage rise Rated current $I_{out\ rated}$ Current range • Up to + 45 °C	< 1.5 s/< 100 ms **2.5 A** 0 ... 2.5 A	< 1.5 s/< 200 ms **6 A** 0 ... 4 A	< 0.3 s/< 500 ms **6 A** 0 ... 6 A
Parallel switching for enhanced performance	Yes	Yes	Yes

Continued on page 13/4.

	24 V/12 A
	6EP1 234-1AA00
	Single-phase AC **230 V AC** 187 ... 264 V AC
	–
	> 10 ms
	50/60 Hz; 47 ... 63 Hz
	2.5 A < 50 A
	< 3.3 A^2s Internal From 10 A, Characteristic C
	Controlled, isolated DC voltage **24 V DC** ±3 % Approx. 0.1 % Approx. 0.5 %
	< 150 mV_{pp} < 250 mV_{pp} 23 ... 26 V Green LED for output voltage OK Overshoot of V_{out} < 5 %
	< 0.3 s/< 500 ms **12 A**
	0 ... 12 A
	Yes

Continued on Page 13/5.

Output current 2,5 to 12 A

Power supply, type	24 V/2.5 A	24 V/4 A	24 V/6 A
Order No.	**6EP1 232-1AA00**	**6EP1 232-1AA10**	**6EP1 233-1AA00**
Efficiency			
Efficiency at $V_{out\ rated}$, $I_{out\ rated}$	Approx. 84 %	Approx. 87 %	Approx. 87 %
Power loss at $V_{out\ rated}$, $I_{out\ rated}$	Approx. 11 W	Approx. 15 W	Approx. 22 W
Closed-loop control			
Dyn. mains compensation ($V_{in\ rated}$ ± 15 %)	< 0.3 % V_{out}	< 0.3 % V_{out}	< 0.3 % V_{out}
Dynamic load smoothing (I_{out}: 50/100/50 %)	Typ. ± 2.0 % V_{out}	Typ. ± 3.0 % V_{out}	Typ. ± 2.0 % V_{out}
Load step settling time			
• 10 to 90 %	Typ. 0.2 ms	Typ. 0.2 ms	Typ. 0.1 ms
• 90 to 100 %	Typ. 0.2 ms	Typ. 0.2 ms	Typ. 0.1 ms
Protection and monitoring			
Output overvoltage protection	< 35 V	< 35 V	< 35 V
Current limit	Typ. 3 A	Typ. 4.4 A	Typ. 6.6 A
Short-circuit protection	Electronic shutdown, automatic restart	Electronic shutdown, automatic restart	Electronic shutdown, automatic restart
Sustained short-circuit current rms value	< 2 A	< 3 A	< 3.6 A
Overload/short-circuit indicator	–	–	–
Safety			
Primary/secondary electrical isolation	Yes, safety extra-low output voltage V_{out} to EN 60950 and EN 50178	Yes, safety extra-low output voltage V_{out} to EN 60950 and EN 50178	Yes, safety extra-low output voltage V_{out} to EN 60950 and EN 50178
Protection class	Class I	Class I	Class I
Leakage current	< 3.5 mA (typ. 0.4 mA)	< 3.5 mA (typ. 0.4 mA)	< 3.5 mA (typ. 0.8 mA)
German Technical Inspectorate approval	Notified Body (CB Scheme)	Notified Body (CB Scheme)	Notified Body (CB Scheme)
CE mark	Yes	Yes	Yes
UL/cUL (CSA) approval	cULus-listed (UL 508, CSA C22.2 No.14), File E197259	cULus-listed (UL 508, CSA C22.2 No.14), File E197259	cULus-listed (UL 508, CSA C22.2 No.14), File E197259
Degree of protection (EN 60529)	IP20	IP20	IP20
EMC			
Emitted interference	EN 55022 Class B	EN 55022 Class B	EN 55022 Class B
Supply-harmonics limitation	Not applicable	–	–
Noise immunity	EN 61000-6-2	EN 61000-6-2	EN 61000-6-2
Operating data			
Ambient temperature range	–10 ... +70 °C for natural convection (derating 2 %/K at 45 ... 70 °C)	–10 ... +70 °C for natural convection (derating 2 %/K at 45 ... 70 °C)	–10 ... +70 °C for natural convection (derating 2 %/K at 45 ... 70 °C)
Transport/storage temperature range	– 25 ... +85 °C	– 25 ... +85 °C	– 25 ... +85 °C
Humidity class	Climate class 3K3 to EN 60721, no condensation	Climate class 3K3 to EN 60721, no condensation	Climate class 3K3 to EN 60721, no condensation
Mechanics			
Connections			
• Supply input L1, N, PE	Removable screw terminal, each 1 x 0.5 ... 2.5 mm^2	Removable screw terminal, each 1 x 0.5 ... 2.5 mm^2	Removable screw terminal, each 1 x 0.5 ... 2.5 mm^2
• Output +	Removable screw terminal, 1 x 0.5 ... 2.5 mm^2	Removable screw terminal, 1 x 0.5 ... 2.5 mm^2	Removable screw terminal, 1 x 0.5 ... 2.5 mm^2
• Output –	Removable screw terminal, 1 x 0.5 ... 2.5 mm^2	Removable screw terminal, 1 x 0.5 ... 2.5 mm^2	Removable screw terminal, 1 x 0.5 ... 2.5 mm^2
Dimensions (W x H x D) in mm	52 x 170 x 110	52 x 170 x 110	52 x 170 x 110
Weight, approx.	0.8 kg	0.8 kg	0.9 kg
Installation	Snaps onto DIN rail EN 60715 35x7,5/15, wall mounting of housing possible	Snaps onto DIN rail EN 60715 35x7,5/15, wall mounting of housing possible	Snaps onto DIN rail EN 60715 35x7,5/15, wall mounting of housing possible

	24 V/12 A
	6EP1 234-1AA00
	Approx. 88 %
	Approx. 39 W
	< 0.3 % V_{out}
	Typ. ±3.5 % V_{out}
	Typ. 0.1 ms Typ. 0.1 ms
	< 35 V Typ. 13.2 A
	Electronic shutdown, automatic restart < 7.5 A
	–
	Yes, safety extra-low output voltage V_{out} to EN 60950 and EN 50178 Class I < 3.5 mA (typ. 0.8 mA)
	Notified Body (CB Scheme)
	Yes Yes, cULus-listed (UL 508, CSA C22.2 No.14), File E197259
	IP20
	EN 55022 Class B – EN 61000-6-2
	–10 ... +70 °C for natural convection (derating 2 %/K at 45 ... 70 °C)
	–25 ... +85 °C Climate class 3K3 according to EN 60721, no condensation
	Removable screw terminal, each 1 x 0.5 ... 2.5 mm^2
	Removable screw terminal, 1 x 0.5 ... 2.5 mm^2 Removable screw terminal, 1 x 0.5 ... 2.5 mm^2
	52 x 170 x 110 0.9 kg Snaps onto DIN rail EN 60715 35x7,5/15, wall mounting of housing possible

Notes

Technical information and notes on configuration

14

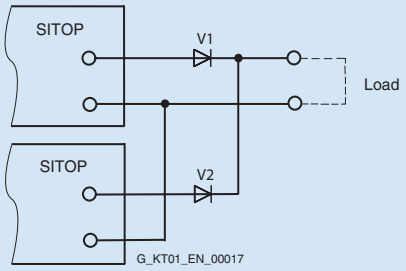

Power supply in general

Power supplies

In plant building or mechanical equipment manufacture, or in any other situations in which electrical controls are used, a safe and reliable power supply is needed to supply the process with power.

The functional reliability of electronic controls and therefore the reliable operation of automated plants is extremely closely linked to the resistance of the load power supply to failure. Final control elements as well as input and output modules will only respond to command signals if the power supply is operating reliably.

In addition to requirements such as safety, particular demands are placed on the electromagnetic compatibility (EMC) of the power supply with reference to the tolerance range of the output voltage as well as its ripple.

Important factors that determine problem-free implementation are, in particular:

- An input current with a low harmonic content
- Low emitted interference and
- Adequate immunity (noise immunity) to interference

EMC	Interference phenomena
Emission (emitted interference)	Interference caused by television and radio reception Interference coupling on data lines or power supply cables
Noise immunity (immunity to interference)	Faults on the power cable due to switching non-resistive loads such as motors or contactors Static discharge due to lightning strikes Electrostatic discharge through the human body Conducted noise induced by radio frequencies

Selected interference phenomena

General notes on DC power supplies

The DC power supply is a static device with one or more inputs and one or more outputs that converts a system of AC voltage and AC current and/or DC voltage and DC current to a system with different values of DC voltage and DC current by means of electromagnetic induction for the purpose of transmitting electrical energy.

The type of construction of a DC power supply is primarily decided by its intended use.

Non-stabilized DC power supplies

The AC mains voltage is transformed using 50 Hz/60 Hz safety transformers to a protective extra-low voltage and smoothed with down-circuit rectification and capacitor filtering.

In the case of non-stabilized DC power supplies, the DC output voltage is not stabilized at a specific value, but the value is varied in accordance with the variation in (mains) input voltage and the loading.

The ripple is in the Volt range and is dependent on the loading. The value for the ripple is usually specified as a percentage of the DC output voltage level. Unstabilized DC power supplies are characterized by their rugged, uncomplicated design that is limited to the important factors and focused on a long service life.

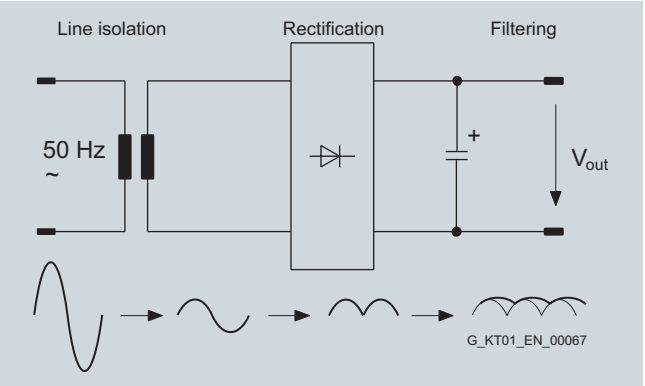

Block diagram of a unstabilized power supply

Stabilized DC power supplies

Stabilized DC power supplies have electronic control circuits that maintain the DC voltage at the output at a specific value with as little variation as possible. Effects such as variation in input voltage or changes in load at the output are electrically compensated in the specified function area.

The ripple in the output voltage for stabilized DC power supplies lies in the millivolt range and is mainly dependent on the loading at the outputs.

Stabilized DC power supplies can be implemented on different functional principles. The most common types of circuit are:

- Linear stabilized power supplies
- Magnetic voltage stabilizers
- Secondary pulsed switched-mode power supplies
- Primary pulsed switched-mode power supplies

The most suitable principle for a particular application case will depend mainly on the application. The objective is to generate a DC voltage to supply the specific load as inexpensively and as accurately as possible.

Stabilized DC power supplies (continued)

Linear stabilized power supplies

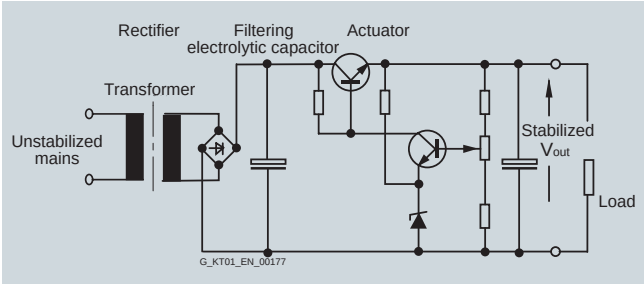

Block diagram: Linear regulator

The linear regulator operates according to a conventional principle. The supply is provided from an AC supply system (one, two or three conductor supply).

A transformer is used to adapt it to form the required secondary voltage.

The rectified and filtered secondary voltage is converted to a stabilized voltage at the output in a regulation section. The regulation section comprises a final control element and a control amplifier. The difference between the stabilized output voltage and the unstabilized voltage at the filter capacitor is converted into a thermal loss in the final control element. The final control element functions in this case like a rapidly changeable ohmic impedance. The thermal loss that arises in each case is the product of output current and voltage drop over the final control element.

This system is extremely adaptable. Even without further modifications, several output voltages are possible. In the case of multiple outputs, the individual secondary circuits are usually generated from separate secondary windings of the input transformer. Some applications can only be resolved in accordance with this circuit principle. Especially when highly accurate regulation, minimal residual ripple and fast compensation times are required.

The efficiency is, however, poor and the weight and volume are considerable. The linear regulator is therefore only an economical alternative at low power ratings.

Advantages:

- Simple, well-proven circuit principle
- Good to excellent control characteristics
- Fast compensation time

Disadvantages:

- Relatively high weight and large volume due to the 50 Hz transformer
- Poor efficiency, heat dissipation problems
- Low storage time

Magnetic stabilizer

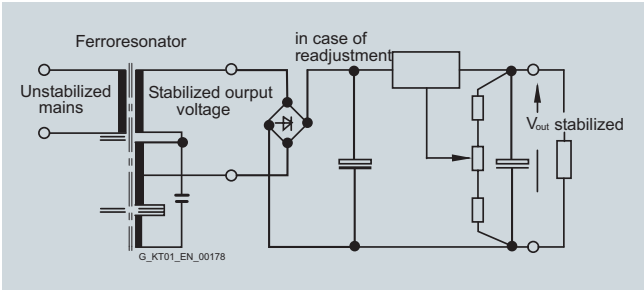

Block diagram: Magnetic stabilizer

The complete transformer comprises two components. The "ferro resonator" and a series-connected auxiliary regulator. The input winding and the resonance winding of the magnetic stabilizer are decoupled to a large extent by means of the air gap. The magnetic stabilizer supplies a well-stabilized AC voltage. This is rectified and filtered. The transformer itself is operated in the saturation range.

The ferro resonator frequently has a linear regulator connected to the output to improve the control accuracy. Secondary pulsed switched-mode regulators are frequently also connected to the output.

The magnetic stabilizer technique is reliable and rugged but is also large-volume, heavy and relatively expensive.

Advantages:

- Good to excellent control characteristics in combination with series-connected linear regulators
- Significantly better efficiency than a linear regulator alone

Disadvantages:

- The ferro resonator is frequency dependent
- The power supplies are large and heavy due to the magnetic components

Secondary pulsed switched-mode power supplies:

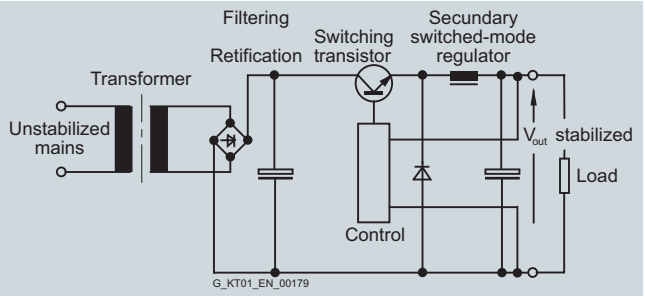

Block diagram: Secondary pulsed switched-mode power supply

Isolation from the supply system is implemented in this case with a 50 Hz transformer. Following rectification and filtering, the energy is switched at the output by means of pulsing through a switching transistor in the filtering and storage circuit. Thanks to the transformer at the input that acts as an excellent filter, the mains pollution is low. The efficiency of this circuit is extremely high.

This concept offers many advantages for power supplies with numerous different output voltages.

To protect the connected loads, however, care must be taken; in the event of the switching transistor breaking down, the full, non-stabilized DC voltage of the filter capacitor will be applied to the output. However, this danger also exists in the case of linear stabilized power supplies.

Advantages:

- Simple design and high efficiency
- Multiple outputs, also galvanically isolated from one another, are easily implemented by means of several secondary windings
- Fewer problems with interference than with primary pulsed switched-mode power supplies

Disadvantages:

- The 50 Hz transformer makes the power supplies relatively large and heavy
- The output ripple (spikes) correspond to those of a primary pulsed switched-mode power supply

Stabilized DC power supplies (continued)

Primary pulsed switched-mode power supplies:

The term SMPS (Switch Mode Power Supply) or primary switched-mode regulator is often used in the literature.

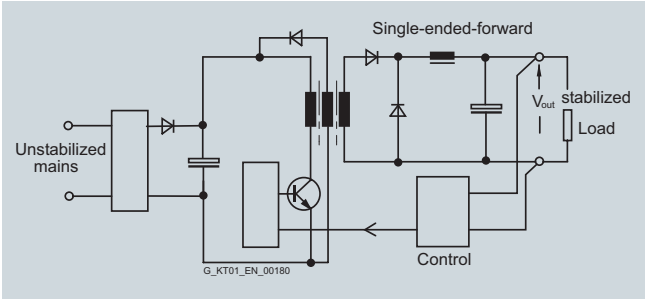

Block diagram: Single-ended forward converter

The primary switched-mode regulators are available in many different circuit versions. The most important basic circuits are single-ended forward converters, flyback converters, halfbridge converters, full-bridge converters, push-pull converters and resonance converters.

The general principle of operation of the primary switched-mode regulator is shown in the block diagram of the single-ended forward converter:

The non-stabilized supply voltage is first rectified and filtered. The capacitance of the capacitor in the DC link determines the storage time of the power supply on failure of the input voltage. The voltage at the DC link is approximately 320 V DC for a 230 V supply. A single-ended converter is then supplied with this DC voltage and transfers the primary energy through a transformer to the secondary side with the help of a pulse width regulator at a high switching frequency. The switching transistor has low power losses when functioning as a switch, so that the power balance lies between > 70 % and 90 % depending on the output voltage and current.

The volume of the transformer is small in comparison with a 50 Hz transformer due to the high switching frequency because the transformer size, taking into account the higher switching frequency, is smaller. Using modern semiconductors, clock frequencies of 100 kHz and above can be achieved. However, switching losses increase at excessively high clock frequencies so that in each case a compromise has to be made between high efficiency and the largest possible clock frequency. In most applications, the clock frequencies lie between approximately 20 kHz and 250 kHz depending on the output power.

The voltage from the secondary winding is rectified and filtered. The system deviation at the output is fed back to the primary circuit through an optocoupler. By controlling the pulse width (conducting phase of the switching transistor in the primary circuit), the necessary energy is transferred to the secondary circuit and the output voltage is regulated. During the non-conducting phase of the switching transistor, the transformer is demagnetized through an auxiliary winding. Exactly the same amount of energy is transferred as is removed at the output. The maximum pulse width for the pulse duty factor for these circuits is < 50 %.

Advantages:

- Small magnetic components (transformer, storage reactor, filter) thanks to the high operating frequency
- High efficiency thanks to pulse width regulation
- Compact equipment units
- Forced-air cooling is not necessary up to the kW range
- High storage times are possible in case of power failure by increasing the capacitance in the DC link
- Large input voltage range possible

Disadvantages:

- High circuit costs, many active components
- High costs for interference suppression
- The mechanical design must be in accordance with HF criteria

Primary switched-mode power supplies have become more and more popular over the last few years, specially due to the small size, low wight, high efficiency and excellent price/performance ratio.

Summary

The most important characteristics of the circuit types described above are summarized in Table 2.

	Connection types			
Comparison criteria	**Primary switched-mode**	**Secondary switched-mode**	**Linear regulator**	**Magnetic stabilizer**
Input voltage range	Very large	Medium	Very small	Large
Regulation speed	Medium	Medium	Very fast	Slow
Storage time after power failure	Very long	Long	Very short	Long
Residual ripple	Medium	Medium	Very low	Medium
Power loss	Very small	Small	Large	Very small
Frame size	Very small	Medium	Very large	Large
Weight	Very light	Medium	Heavy	Very heavy
Interference suppression costs	Very large	Medium	Low	Medium

Comparison criteria for basic circuit variants

Supply system data

When dimensioning and selecting plant components, the supply systems data, supply system conditions and operating modes must be taken into account for these components.

The most important data for a supply system include the rated voltage and rated frequency. These data for the supply system are designated as rated values in accordance with international agreements.

Rated voltages and rated frequencies

Since May 1987, the standard DIN IEC 60038 "IEC rated voltages" has been applicable in the Federal Republic of Germany.

The international standard IEC 60038, Edition 6, 1983, "IEC standard voltages" was included unmodified in this standard.

The IEC 60038 standard is the result of an international agreement to reduce the diverse rated voltage values that are in use for electrical supply networks and traction power supplies, load installations and equipment.

Conversion of low-voltage systems

In the low-voltage range, it is emphasized in IEC 60038 that the 220 V/380 V and 240 V/415 V values for three-phase power supply systems have been replaced by a single, internationally standardized value of 230 V/400 V.
The tolerances for the rated voltages of the supply systems that were specified for the transition period up to 2003 were intended to ensure that equipment rated for the previous voltages could be operated safely until the end of its service life.

Year	Rated voltage	Tolerance range
Up to 1987	220 V/380 V	– 10 % to +10 %
From 1988 to 2003	230 V/400 V	– 10 % to + 6 %
Since 2003	230 V/400 V	– 10 % to +10 %

Conversion of low-voltage systems

The IEC recommendations have been implemented as national regulations in the most important countries, as far as the conditions in the country allow.

International supply voltages and frequencies in low-voltage systems

Country	Supply voltage
Western Europe:	
Belgium	50 Hz 230/400 – 127-220 V
Denmark	50 Hz 230/400 V
Germany	50 Hz 230/400 V
Finland	50 Hz 230/400-500[1] – 660[1] V
France	50 Hz 127/220 – 230/400 – 500[1] – 380/660[1] – 525/910[1] V
Greece	50 Hz 230/400 – 127/220[2] V
Great Britain	50 Hz (230/400 V)
Ireland	50 Hz 230/400 V
Iceland	50 Hz 127/220[2] – 230/400 V
Italy	50 Hz 127/220 – 230/400 V
Luxembourg	50 Hz 230/400 V
Netherlands	50 Hz 230/400 – 660[1] V
Northern Ireland	50 Hz 230/400 – Belfast 220/380 V
Norway	50 Hz 230-230/400-500[1] – 690[1] V
Austria	50 Hz 230/400 – 500[1] – 690[1] V
Portugal	50 Hz 230/400 V
Sweden	50 Hz 230/400 V
Switzerland	50 Hz 230/400 – 500[2] V
Spain	50 Hz 230/400 V
Eastern Europe:	
Albania	50 Hz 230/400 V
Bulgaria	50 Hz 230/400 V
Russian Federation	50 Hz 230/400 – 690[1] V
Croatia	50 Hz 230/400 V
Poland	50 Hz 230/400 V
Romania	50 Hz 230/400 V
Serbia	50 Hz 230/400 V
Slovakia	50 Hz 230/400 – 500[1] – 690[1] V
Slovenia	50 Hz 230/400 V
Czech Republic	50 Hz 230/400 – 500[1] – 690[1] V
Hungary	50 Hz 230/400 V

[1] Industry only
[2] No further expansion

International supply voltages and frequencies in low-voltage systems (continued)

Country	Supply voltage
Middle-East:	
Afghanistan	50 Hz 220/380 V
Bahrain	50 Hz 230/400 V
Cyprus	50 Hz 240/415 V
Iraq	50 Hz 220/380 V
Israel	50 Hz 230/400 V
Jordan	50 Hz 220/380 V
Kuwait	50 Hz 240/415 V
Lebanon	50 Hz 110/190 – 220/380 V
Oman	50 Hz 220/380 – 240/415 V
Qatar	50 Hz 240/415 V
Saudi Arabia	60 Hz 127/220 – 220/380 – 480[1] V (220/380 – 240/415 V 50 Hz: remainder only)
Syria	50 Hz 115/200 – 220/380 – 400[1] V
Turkey	50 Hz 220/380 V (parts of Istanbul: 110/190 V)
United Arab Emirates (Abu Dhabi; Ajman; Dubai; Fujairah; Ras al Khaymah; Sharjah; Um al Qaywayn)	50 Hz 220/380 – 240/415 V
Yemen (North)	50 Hz 220/380 V
Yemen (South)	50 Hz 230/400 V
Far East:	
Bangladesh	50 Hz 230/400 V
Burma	50 Hz 230/400 V
People's Republic of China	50 Hz 127/220 – 220/380 V (in mining: 1140 V)
Hong Kong	50 Hz 200/346 V
India	50 Hz 220/380 – 230/400 – 240/415 V
Indonesia	50 Hz 127/220 – 220/380 – 400[1] V
Japan	50 Hz 100/200 – 400[1] V
South Honshu, Shikoku, Kyushu, Hokkaido, North Honshu	60 Hz 110/220 – 440[1] V
Cambodia	50 Hz 120/208 V – Phnom Penh 220/238 V
Korea (North)	60 Hz 220/380 V
Korea (South)	60 Hz 100/200[2] – 220/380 – 440[1] V
Malaysia	50 Hz 240/415 V
People's Republic of Mongolia	50 Hz 220/380 V
Pakistan	50 Hz 230/400 V
Philippines	60 Hz 110/220 – 440 V
Singapore	50 Hz 240/415 V
Sri Lanka	50 Hz 230/400 V
Taiwan	60 Hz 110/220 – 220 – 440 V
Thailand	50 Hz 220/380 V
Vietnam	50 Hz 220/380 V
North America:	
Canada	60 Hz 600 – 120/240 – 460 – 575 V
USA	60 Hz 120/208 – 120/240 – 277/480 – 600[1] V
Central America:	
Bahamas	60 Hz 115/200 – 120/208 V
Barbados	50 Hz 110/190 – 120/208 V
Belize	60 Hz 110/220 – 220/440 V
Costa Rica	60 Hz 120/208[2] – 120/240 – 127/220 – 254/440[2] – 227/480[1] V
Dominican Republic	60 Hz 120/208 – 120/240 – 480[1] V

[1] Industry only
[2] No further expansion

International supply voltages and frequencies in low-voltage systems (continued)

Country	Supply voltage
Central America (continued)**:**	
Guatemala	60 Hz 120/208 – 120/240 – 127/220 – 277/480[1] – 480[1] – 550[1] V
Haiti	50 Hz 220/380 V (Jacmel), 60 Hz 110/220 V
Honduras	60 Hz 110/220 – 127/220 – 277/480 V
Jamaica	50 Hz 110/220 – 440[1] V
Cuba	60 Hz 120/240 – 220/380 – 277/480[1] – 440[1] V
Mexico	60 Hz 127/220 – 440[1] V
Nicaragua	60 Hz 110/220 – 120/240 – 127/220 – 220/440 – 254/40[1] V
Panama	60 Hz 120/208[1] – 120/240 – 254/440[1] – 277/480[1] V
Puerto Rico	60 Hz 120/208 – 480 V
El Salvador	60 Hz 110/220 – 120/208 – 127/220 – 220/440 – 240/480[1] – 254/440[1] V
Trinidad	60 Hz 110/220 – 120/240 – 230/400 V
South America:	
Argentina	50 Hz 220/380 V
Bolivia	60 Hz 220/380 – 480 V, 50 Hz 110/220 – 220/380 V (exception)
Brazil	60 Hz 110/220 – 220/440 – 127/220 – 220/380 V
Chile	50 Hz 220/380 V
Ecuador	60 Hz 120/208 – 127/220 V
Guyana	50 Hz 110/220 V (Georgetown), 60 Hz 110/220 – 240/480 V
Colombia	60 Hz 110/220 – 150/260 – 440 V
Paraguay	60 Hz 220/380 – 220/440 V
Peru	60 Hz 220 – 220/380/440 V
Surinam	60 Hz 115/230 – 127/220 V
Uruguay	50 Hz 220 V
Venezuela	60 Hz 120/208 – 120/240 – 208/416 – 240/480 V
Africa:	
Egypt	50 Hz 110/220 – 220/380 V
Ethiopia	50 Hz 220/380 V
Algeria	50 Hz 127/220 – 220/380 V
Angola	50 Hz 220/380 V
Benin	50 Hz 220/380 V
Ivory Coast	50 Hz 220/380 V
Gabon	50 Hz 220/380 V
Ghana	50 Hz 127/220 – 220/380 V
Guinea	50 Hz 220/380 V
Kenya	50 Hz 220/380 V
Cameroon	50 Hz 127/220 – 220/380 V
Congo	50 Hz 220/380 V
Liberia	60 Hz 120/208 – 120/240 V
Libya	50 Hz 127/220[2] – 220/380 V
Madagascar	50 Hz 127/220 – 220/380 V
Malawi	50 Hz 220/380 V
Mali	50 Hz 220/380 V
Morocco	50 Hz 115/200 – 127/220 – 220/380 – 500[1] V
Mauritius	50 Hz 240/415 V
Mozambique	50 Hz 220/380 V
Namibia	50 Hz 220/380 V
Niger	50 Hz 220/380 V

[1] Industry only
[2] No further expansion

International supply voltages and frequencies in low-voltage systems (continued)

Country	Supply voltage
Africa (continued)**:**	
Nigeria	50 Hz 220/415 V
Rwanda	50 Hz 220/380 V
Zambia	50 Hz 220/380 V – 415 – 550[1)] V
Senegal	50 Hz 127/220 – 220/380 V
Sierra Leone	50 Hz 220/380 V
Somalia	50 Hz 220-220/440 V
Sudan	50 Hz 240/415 V
South Africa	50 Hz 220/380 – 500[1)] – 550/950[1)] V
Swaziland	50 Hz 220/380 V
Tanzania	50 Hz 230/400 V
Togo	50 Hz 127/220 – 220/380 V
Tunisia	50 Hz 115/200 – 220/380 V
Uganda	50 Hz 240/415 V
Zaire	50 Hz 220/380 V
Zimbabwe	50 Hz 220/380 V

Connection and fusing on the line side

All SITOP and LOGO!Power supplies are built-in devices. For installation of the devises, the relevant DIN/VDE requirements or the country-specific regulations must be taken into account. During installation, protective gear and isolating gear must be provided for activating the power supply.

Power supply units cause a current inrush immediately after connection of the input voltage due to charging of the load capacitor, however, it falls back to the rated input current level after a few milliseconds. Aside from the internal impedances of the power supply, the inrush current is dependent on the size of the input voltage applied as well as the source impedance of the supply network and the line impedance of the supply line. The maximum inrush current for the power supplies is specified in the applicable technical data.
It is important for dimensioning up-circuit protective devices.

Single-phase SITOP and LOGO!Power supplies are equipped with internal device protection (fuses). For connection to the supply system, only one protective device (fuse or MCB) must be provided for line protection in accordance with the rated current of the installed cable. The circuit-breakers recommended in the data sheets and operating instructions have been selected such that even during the maximum inrush current that can occur under worst-case conditions when switching on the supply voltage, the circuit-breaker will not trip. A two-pole connected miniature circuit-breaker is required for the connection of certain device types.

Three-phase SITOP power supplies do not have internal device protection. The up-circuit protective device (three-phase coupled miniature circuit-breaker or motor protection switch) protects the cables and devices. The protective devices specified in the data sheets and operating instructions are optimized to the characteristics of the relevant power supplies.

[1)] Industry only

Overview

The quality of the mains voltage has become a decisive factor in the functioning, reliability, maintenance costs and service life of highly sensitive electronic installations and devices (computers, industrial controls, instrumentation, etc.).

Mains disturbances cause system failures and affect the function of plants as well as electronic loads. They can also result in total failure of the installation or equipment.

The most frequent types of disturbance are:

- Long-term overvoltages
- Long-term undervoltages
- Interference pulses and transients
- Voltage dips and surges
- Electrical noise
- Momentary network failure
- Long-term network failure

Mains disturbances can be caused by a number of things, e.g.:

- Switching operations in the supply system
- Long cable paths in the supply system
- Environmental influences such as thunderstorms
- Mains overloads

Typical causes of mains disturbances generated in-house are:

- Thyristor-controlled drives
- Elevators, air-conditioning, photocopiers
- Motors, reactive-power compensation systems
- Electrical welding, large machines
- Switching of lighting equipment

Disturbances in mains voltages can occur individually or in combination. Possible reasons for these disturbances and reactions can include:

System disturbances	Percentage of total disturbance	Action
Overvoltage The supply voltage is exceeded for a long period by more than +6 % (acc. to DIN IEC 60038)	approx. 15 % – 20 %	Can result in overheating and even thermal destruction of individual components. Causes total failure.
Undervoltage The supply voltage is reduced for a long period by more than + 10 % (acc. to DIN IEC 60038)	approx. 20 % – 30 %	Can result in undefined operating states of loads. Causes data errors.
Interference pulses Energy-rich pulses (e.g. 700 V/1 ms) and energy-poor transients (e.g. 2500 V/20 µs) result from switching operations in the supply system	approx. 30 % – 35 %	Can result in undefined operating states of the loads and can lead to the destruction of components.
Voltage dips and surges The voltage level changes suddenly and in an uncontrolled manner, e.g. due to changes in loading and long cable routes	approx. 15 % – 30 %	Can result in undefined operating states and destruction of components. Cause data errors.
Electrical noise A mix of frequencies superimposed on the mains due to bad grounding and/or strong HF emitters, such as radio transmitters or thunderstorms	approx. 20 % – 35 %	Can result in undefined operating states of loads. Causes data errors.
Voltage interruption Short-term interruption of the supply voltage (up to approx. 10 ms) due to short-circuiting in neighboring supply systems or starting of large electrical machines.	approx. 8 % – 10 %	Can result in undefined operating states of loads, especially those with insufficient mains buffering. Causes data errors.
Voltage interruption Long interruption of the supply voltage (longer than approx. 10 ms)	approx. 2 % – 5 %	Can result in undefined operating states of loads, especially those with insufficient mains buffering. Causes data errors.

Mains disturbances and effects

The SITOP product family offers a range of possibilities for minimizing or preventing the risk of mains disturbances already during the planning stage.

Installation instructions, mounting areas and fixing options

Installation instructions

All SITOP and LOGO!Power supplies are built-in devices. They must be mounted vertically so that the supply air can enter the ventilation slots at the bottom of the devices and leave through the upper part of the devices. If the units are not mounted vertically (at your own risk), the ambient temperature should not exceed +45 °C and the load current should not exceed approx. 50 % of the rated current value. The minimum distances specified in the relevant operating instructions for the top, bottom and side of the devices must be observed to ensure free air convection.

Mounting areas and fixing options

Power supply	Order No.	Required mounting area in mm (W x H)	Mounting on a standard rail acc. to EN 60715 35 x 7.5 mm	35 x 15 mm	Wall mounting
SITOP 24 V, single-phase and two-phase power supplies					
24 V/0.375 A	6EP1731-2BA00	22.5 x 180	X	X	
24 V/0.5 A	6EP1331-2BA10	22.5 x 180	X	X	
24 V/2 A	6ES7307-1BA00-0AA0	50 x 205		1)	
	6ES7305-1BA80-0AA0	80 x 225		1)	
	6EP1732-0AA00	80 x 235		X	X
24 V/2.5 A	6EP1332-2BA10	33 x 225	X	X	
	6EP1332-1SH12	80 x 335		X	X
24 V/3.5 A	6EP1332-1SH31	160 x 280	X	X	X
24 V/3.7 A	6EP1332-2BA00	75 x 225	X	X	
24 V/4 A	6EP1332-1SH22	80 x 335		X	X
24 V/5 A	6EP1333-3BA00	70 x 225	X	X	
	6EP1333-2BA01	50 x 225	X	X	
	6EP1333-2AA01	50 x 225	X	X	
	6ES7307-1EA00-0AA0	80 x 205		1)	
	6ES7307-1EA80-0AA0	80 x 225		1)	
	6EP1333-1AL12	160 x 230	X	X	
24 V/10 A	6EP1334-3BA00	90 x 225	X	X	
	6EP1334-2BA01	70 x 225	X	X	
	6EP1334-2AA01	70 x 225	X	X	
	6ES7307-1KA01-0AA0	120 x 205		1)	
	6EP1334-1AL12	160 x 230	X	X	
	6EP1334-1SH01	200 x 325		X	
24 V/20 A	6EP1336-3BA00	160 x 225	X	X	
24 V/40 A	6EP1337-3BA00	240 x 225	X	X	
SITOP 24 V, three-phase power supplies					
24 V/10 A	6EP1434-2BA00	320 x 225	X	X	
24 V/20 A	6EP1436-3BA01	70 x 225	X	X	
	6EP1436-3BA00	160 x 225	X	X	
	6EP1436-2BA00	320 x 225	X	X	
24 V/30 A	6EP1437-2BA00	320 x 280	X	X	
24 V/40 A	6EP1437-3BA00	240 x 225	X	X	
	6EP1437-2BA10	320 x 280	X	X	
SITOP 24 V, uninterruptible power supplies					
DC UPS 6 A (with serial/ USB interface)	6EP1931-2DC21 (-2DC31/-2DC42)	50 x 225	X	X	
DC UPS 15 A (with serial/ USB interface)	6EP1931-2EC21 (-2EC31/-2EC42)	50 x 225	X	X	
DC UPS 40 A (with USB interface)	6EP1931-2FC21 (-2FC42)	102 x 225	X	X	

Power supply	Order No.	Required mounting area in mm (W x H)	Mounting on a standard rail acc. to EN 60715 35 x 7.5 mm	35 x 15 mm	Wall mounting
SITOP 24 V, uninterruptible power supplies					
Battery module 1.2 Ah	6EP1935-6MC01	116 x 126	X	X	X
Battery module 2.5 Ah	6EP1935-6MD31	285 x 171	X	X	X
Battery module 3.2 Ah	6EP1935-6MD11	210 x 171	X	X	X
Battery module 7 Ah	6EP1935-6ME21	206 x 188			X
Battery module 12 Ah	6EP1935-6MF01	273 x 138			X
SITOP, add-on modules					
Signaling module	6EP1961-3BA10	26 x 225			
Buffer module	6EP1961-3BA00	70 x 225	X	X	
Redundancy module	6EP1961-3BA20	70 x 225	X	X	
Diagnostics module	6EP1961-2BA00	72 x 190	X	X	
SITOP - Alternative voltage					
3-57 V/125 W	6EP1353-2BA00	75 x 225	X	X	
2 x 15 V/3.5 A	6EP1353-0AA00	75 x 325	X	X	
48 V/10 A	6EP1456-2BA00	70 x 225	X	X	
48 V/20 A	6EP1457-3BA00	240 x 255	X	X	
LOGO!Power					
5 V/3 A	6EP1311-1SH02	54 x 130	X	X	
12 V/1.9 A	6EP1321-1SH02	54 x 130	X	X	
15 V/1.9 A	6EP1351-1SH02	54 x 130	X	X	
24 V/1.3 A	6EP1331-1SH02	54 x 130	X	X	
5 V/6.3 A	6EP1311-1SH12	72 x 130	X	X	
12 V/4.5 A	6EP1322-1SH02	72 x 130	X	X	
15 V/4 A	6EP1352-1SH02	72 x 130	X	X	
24 V/2.5 A	6EP1332-1SH42	72 x 130	X	X	
24 V/4 A	6EP1332-1SH51	90 x 130	X	X	
SITOP PSA 100E					
24 V/2.5 A	6EP1232-1AA00	52 (110) x 230	X	X	X
24 V/4 A	6EP1232-1AA10	52 (110) x 230	X	X	X
24 V/6 A	6EP1233-1AA00	52 (110) x 230	X	X	X
24 V/12 A	6EP1234-1AA00	52 (110) x 230	X	X	X

1) With additional mounting adapter 6ES7390-6BA00-0AA0.

Planning aids

As an aid for planning and construction, operating instructions with mounting options, dimension drawings and principle circuits with pin names in different file formats (also suitable for CAD applications) are available for download on the Internet.

More information is available on the Internet at

http://www.siemens.com/sitop

Parallel connection for redundant operation and performance enhancement

Parallel connection for redundant operation

Two SITOP power supplies of the same type can be connected in parallel through diodes for a redundant configuration. Hundred percent redundancy only exists for two power supplies when the total load current is no higher than that which one power supply can supply alone and when the supply for the primary side is also implemented redundantly (i.e. a short-circuit on the primary side will not trigger a shared fuse which would disconnect both power supplies from the mains).

Parallel connection with decoupling diodes for redundant operation is permitted for all SITOP power supplies. The diodes V1 and V2 are used for decoupling. They must have a blocking voltage of at least 40 V and it must be possible to load them with a current equal to or greater than the maximum output current of the respective SITOP power supply. For diode dimensioning, see the following note "General information on selection of diodes".

The ready-to-use add-on "SITOP modular redundancy module" is available as a simple alternative to diode dimensioning (Order No.: 6EP1961-3BA20, see Section 8) for redundant connection of two power supplies.

General information on selection of diodes:

The diodes must be dimensioned for the maximum dynamic overcurrent. This can be the dynamic overcurrent during power-up in the short-circuit case, or the dynamic overcurrent during a short-circuit in operation (the largest of the two values should be taken from the relevant technical specifications).

To dissipate the significant power losses of the decoupling diodes (rms-value of sustained short-circuit current x diode conductive-state voltage), the diodes must be mounted on suitably dimensioned heat sinks.

An additional safety margin is recommended, because the output capacitor integral to the power supply generates an additional peak current in the short-circuit case. This additional current flows only for a few milliseconds so it is within the period in which diodes are permitted to be loaded with a multiple of the rated current (< 8.3 ms, known as the permissible surge current for diodes) .

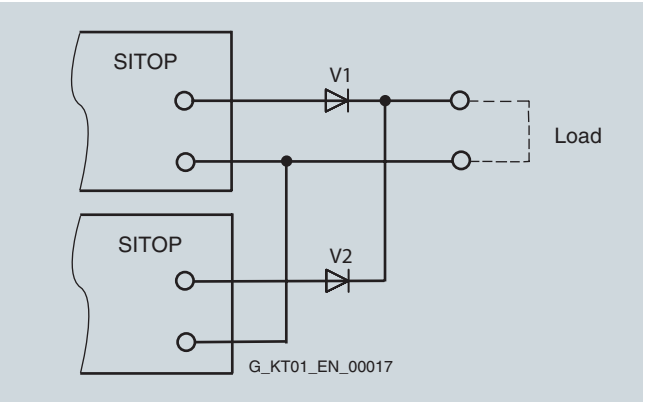

Parallel connection of two SITOP power supplies for redundant operation

Example

Two single-phase SITOP modular power supplies with 10 A rated output current, (Order No.: 6EP1 334-3BA00) are connected in parallel. The dynamic overcurrent in the event of a short-circuit during operation is approximately 30 A for 25 ms.

The diodes should therefore have a loading capability of 40 A to be safe, the common heat sink for both diodes must be dimensioned for the maximum possible current of approximately 24 A (sustained short-circuit current rms value) x diode conductive-state voltage.

Parallel connection for performance enhancement

To enhance performance, identical types of most SITOP power supplies can be connected in parallel galvanically (the same principle as parallel connection for redundant operation, but without decoupling diodes):

Advantage

The costs for mounting the diodes onto heat sinks and the not insignificant power losses for the decoupling diodes (current x diode conducting-state voltage) are avoided.

The types permitted for direct galvanic parallel connection are listed in the relevant technical specifications under "Output, parallel connection for performance enhancement".

Prerequisite:

- The output cables connected to terminals "+" and "–" of every power supply should be installed with an identical length and cross-section (or the same impedance) to the common external linking point.
- The power supplies connected in parallel must be switched simultaneously using a common switch in the mains supply line (e.g. using the main switch available in control cabinets).
- The output voltages of the power supplies must be measured under no-load operation before they are connected in parallel and are permitted to differ by up to 50 mV. This usually corresponds to the factory default setting. If the output voltage is changed in case of variable power supplies, the "–" terminals should first be connected and then the voltage difference between the "+" output terminals measured under no-load conditions before these are connected. This voltage difference must not exceed 50 mV.

Note:

With a direct galvanic connection in parallel of more than two SITOP power supplies, further circuit measures may be necessary for short-circuit and overload protection!

Parallel connection for redundant operation and performance enhancement

Almost 100 % redundancy

Using the types permitted for direct galvanic parallel connection (see the relevant technical specifications under "Output, parallel connection for performance enhancement"), performance can be increased without the need for decoupling diodes, and simultaneously, redundancy of almost 100 % can be implemented by direct galvanic parallel connection of an additional power supply of the same type to the power supplies required. This means that at least one power supply is required than is necessary for the sum of all load currents.

A decoupling diode is normally required for redundancy to ensure that a power supply that has failed as a result of short-circuiting of the outputs (especially as a result of short-circuiting the output electrolytic capacitor) does not also short-circuit the power supplies that remain intact. A redundancy of almost 100 % can be implemented with this type of circuit.

Example

A load current of up to 40 A is required and the power supplies must operate on both 400 V and 500 V three-phase supplies (without switch-over).

The three-phase 20 A SITOP modular power supply (Order No.: 6EP1 436-3BA01) is suitable for this purpose. For load currents up to 40 A, direct galvanic parallel connection of two SITOP modular power 20 supplies is necessary. By connecting another SITOP modular 20 in parallel, performance enhancement and redundancy are implemented simultaneously (if one of the three power supplies fails to supply an output voltage, the remaining two 20 A power supplies are capable of supplying a total load current of 40 A).

Note:

With a direct galvanic connection in parallel of more than two SITOP power supplies, further circuit measures may be necessary for short-circuit and overload protection!

Series connection to increase the voltage

To generate a load voltage of e. g. 48 V DC, two 24 V SITOP power supplies of the same type can be connected in series. The SITOP outputs "+" and "–" are isolated up to at least 60 V DC against PE (air gaps and creepage distances as well as radio interference suppression capacitors on "+" and "–" against PE), so that with this type of series connection (see Figure), the following points can be grounded:

- "–" of the lower power supply (results in +48 V DC against PE)
- Midway "+"/ "–" between both power supplies (results in ±24 VDC against PE)
- "+" of the lower power supply (results in -48 V DC against PE)

Note:

If two devices are connected in parallel, it cannot be guaranteed that the voltage will remain below the maximum permissible SELV voltage of 60 V DC in the event of a fault.

The purpose of diodes V1 and V2 is to protect the electrolytic output capacitor integrated in the power supply against reverse voltages > 1 V. As a result of the not absolutely simultaneous power-up (even when a common mains switch is used for switching on, differences of a few tens of milliseconds can occur between the various startup-up delays), the power supply which starts up more quickly supplies current from output "–" of the slower power supply whose output electrolytic capacitor is then theoretically impermissibly discharged.

The internal LC filter causes the internal rectifier diode on the secondary side of the slower-starting power supply to accept this current a few milliseconds later; this means that the external diode connected with its anode to "–" and cathode to "+" is essential on each power supply. These diodes are, however, only loaded dynamically, so that the 8.3 ms surge current loading capability (specified in the data sheets for suitable diodes) can be used as a basis for dimensioning and it is not usually necessary to cool the diodes using heat sinks.

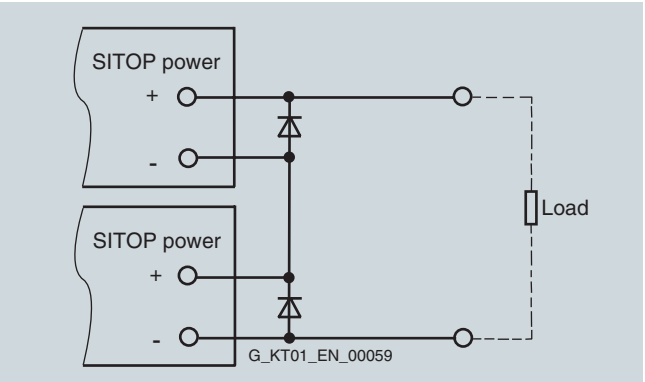

Series connection of two SITOP power units to double the voltage

Example:

Two single-phase SITOP modular power supplies with 10 A rated output voltage (Order No.: 6EP1 334-1AL12) should be connected in series to increase the voltage. They supply approximately 35 A dynamically for 700 ms on power-up in the short-circuit case or also, for example, with loads with a high-capacity input capacitor that momentarily act as a short-circuit at the start.

Suitable diodes for V1 and V2 are, for example, of Type SB 340[1)] (Schottky diode in axially wired enclosure DO-201AD with approximately 5.3 mm diameter and approximately 9.5 mm length of body).

40 V are permissible as the blocking voltage, and the stationary direct current load capacity $I_{F\,AV}$ is 3 A. The dynamic surge current loading capacity $I_{F\,SM}$ important in this case is sufficient for the selected SITOP power supply at more than 100 A for 8.3 ms. For SITOP power supplies with a low rated output current, this diode can also be used, but it is over-dimensioned.

- Manufacturer: General Instrument
- Distributor: e.g. RS Components, Spoerle

[1)] We do not accept any liability for this diode recommendation.

Battery charging with SITOP power supplies

The SITOP modular power supplies 5 A to 40 A with stabilized output voltage that can be set between 24.0 V to 28.8 V supply a constant output current of approximately 1.2 x rated current under overload conditions (e.g. a completely discharged 24 V lead-acid battery). In the case of a V/I characteristic set for parallel operation, the battery will be charged with a constant current until approximately 95 % of the set SITOP output voltage has been achieved. The charging current is then continuously reduced from 1.2 x rated current at 95 % of the set voltage to approximately 0 A or the self-discharge current of the battery at 100 % of the set output voltage, that is, resistance characteristic in this range.

As reverse voltage protection and polarity reversal protection, we recommend that a diode suitable for at least 1.2 x rated current of the power supply with a blocking voltage of at least 40 V is connected in series with the "+" output (anode connected to "+" output of the SITOP modular and cathode connected to positive pole of the battery).

The output voltage of the power supply must be set at no-load to the end-of-charge voltage plus the voltage drop at the diode. For an end-of-charge voltage of e. g. 27.0 V DC (usual at 20 °C to 30 °C battery temperature; in each case, compliance with the specifications of the battery manufacturer must be observed!) and 0.8 V voltage drop at the diode, SITOP modular must be set to 27.8 V during no-load operation.

General note for using SITOP power supplies as a battery-charging unit

When SITOP modular is used as a battery charging unit, the regulations of VDE 0510 or the relevant national regulations must be observed, and adequate ventilation of the battery location must be provided. The SITOP modular power supplies are designed as rack-mounting units, and protection against electric shock should therefore be provided by installation in an appropriate housing.

The value recommended by the battery manufacturer must be set as the end-of-charge voltage (depending on the battery temperature). An ideal temperature for the lead-acid battery is between +20 to 30°C and the recommended end-of-charge voltage in this case is usually about 27 V.

Fusing of 24 V power supply circuits and selectivity

With unstabilized rectifiers (power transformer equipped with rectifier) the output usually had to be protected with a suitable fuse so that its rectifier diodes would not fail in the event of an overload or a short-circuit (this would destroy the DC loads due to the resulting alternating voltage and lead to serious damage in most cases).

On the other hand, the stabilized SITOP power supplies are provided with integral electronic short-circuit protection that automatically protects both the power supply and the supplied 24 V DC circuits against an excess current in the event of an overload/short-circuit. A distinction must be made between the following three cases with respect to fusing on the secondary side:

Fusing of 24 V power supply circuits and selectivity (continued)

Example 1: No fusing

Fusing the secondary side (24 V DC) for protecting the load circuits and lines is not required if the respective cross-sections are selected for the maximum possible output current RMS value. Depending on the event (short-circuit or overload) this may either be the short-circuit RMS value or the current limitation value.

Example SITOP modular 10 A (Order No.: 6EP1334-3BA00)

- 10 A rated current
- Current limitation typ. 12 A
- Short-circuit current rms value approximately 12 A

The technical specifications usually specify typical values, maximum values are approximately 2 A above the typical value. In the example here, a maximum possible output current rms value of approximately 14 must therefore be used for line dimensioning.

Example 2: Reduced cross-sections

If smaller cross-sections are used than are specified in the relevant standards (e.g. EN 60204-1), the affected 24 V load infeed cables must be protected with a suitable circuit breaker.

It is then unimportant whether the power supply enters current limiting mode (overload) or delivers the maximum short-circuit current (low-resistance short-circuit).
The load supply is in any case protected against an overload by the line protection matched to the conductor cross-section.

Example 3: Selectivity

In cases where a load which has failed (e.g. because of a short-circuit) has to be rapidly detected or where it is essential to selectively switch it off before the power supply enters current limiting mode (with current limiting mode, the voltage would also fall for all remaining 24 V DC loads), there are two possibilities for the secondary side connection.

- **Use of the 4-channel electronic diagnostics module SITOP select (Order No.: 6EP1961-2BA00), with a current adjustable from 2 to 10 A from 2 to 10 A**
- Series connection of appropriate 24 V DC fuses or circuit breakers

The basis for selection of the 24 V DC fuse or circuit-breaker is the short-circuit current above the rated current which the SITOP power supplies deliver in the event of a short-circuit during operation (values are specified in the respective technical specifications under "Output, dynamic V/I on short-circuit during operation").

It is not easy to calculate the amount of the short-circuit current flowing into the usually not ideal "short-circuit" and the amount flowing into the remaining loads. This depends on the type of overload (high-resistance or low-resistance short-circuit) and the type of load connected (resistive, inductive and capacitive/electronic loads).

However, it can be assumed with a first approximation in the average case encountered in practice that the difference of dyn. V/I minus 50 % SITOP rated output current is available for the immediate tripping of a circuit-breaker within a typical time of 12 ms (with 14 times the rated DC with a circuit-breaker characteristic C acc. to IEC 898, or with 7 times the rated DC with a circuit-breaker characteristic B, or with 5 times the rated DC with a circuit-breaker characteristic A). Please refer to the following tables for circuit-breakers appropriate for selected fusing according to this assumption.

Fusing of the 24 V DC output circuit, selectivity

List of ordering data and tripping characteristics of single-pole circuit-breakers 5SY4...

acc. to IEC 898 / EN 60898, for use up to 60 V (250 V AC, switching capacity 10,000 A)

Rated current	Tripping characteristic	Order No.	Range for immediate tripping < 100 ms for operation with direct current (alternating current)	Required DC for immediate tripping in < 100 ms	Required DC for immediate tripping in approx. 12 ms
1 A	Type A	5SY4 101-5	DC: 2 ... 5 (AC: 2 ... 3) x I_{rated}	2 to 5 A DC	5 A DC
1 A	Type C	5SY4 101-7	DC: 5 ... 14 (AC: 5 ... 10) x I_{rated}	5 to 14 A DC	14 A DC
1.6 A	Type A	5SY4 115-5	DC: 2 ... 5 (AC: 2 ... 3) x I_{rated}	3.2 to 8 A DC	8 A DC
1.6 A	Type C	5SY4 115-7	DC: 5 ... 14 (AC: 5 ... 10) x I_{rated}	8 to 22.4 A DC	22.4 A DC
2 A	Type A	5SY4 102-5	DC: 2 ... 5 (AC: 2 ... 3) x I_{rated}	4 to 10 A DC	10 A DC
2 A	Type C	5SY4 102-7	DC: 5 ... 14 (AC: 5 ... 10) x I_{rated}	10 to 28 A DC	28 A DC
3 A	Type A	5SY4 103-5	DC: 2 ... 5 (AC: 2 ... 3) x I_{rated}	6 to 15 A DC	15 A DC
3 A	Type C	5SY4 103-7	DC: 5 ... 14 (AC: 5 ... 10) x I_{rated}	15 to 42 A DC	42 A DC
4 A	Type A	5SY4 104-5	DC: 2 ... 5 (AC: 2 ... 3) x I_{rated}	8 to 20 A DC	20 A DC
4 A	Type C	5SY4 104-7	DC: 5 ... 14 (AC: 5 ... 10) x I_{rated}	20 to 56 A DC	56 A DC
6 A	Type A	5SY4 106-5	DC: 2 ... 5 (AC: 2 ... 3) x I_{rated}	12 to 30 A DC	30 A DC
6 A	Type B	5SY4 106-6	DC: 3 ... 7 (AC: 3 ... 5) x I_{rated}	18 to 42 A DC	42 A DC
6 A	Type C	5SY4 106-7	DC: 5 ... 14 (AC: 5 ... 10) x I_{rated}	30 to 84 A DC	84 A DC
8 A	Type A	5SY4 108-5	DC: 2 ... 5 (AC: 2 ... 3) x I_{rated}	16 to 40 A DC	40 A DC
8 A	Type C	5SY4 108-7	DC: 5 ... 14 (AC: 5 ... 10) x I_{rated}	40 to 112 A DC	112 A DC
10 A	Type A	5SY4 110-5	DC: 2 ... 5 (AC: 2 ... 3) x I_{rated}	20 to 50 A DC	50 A DC
10 A	Type B	5SY4 110-6	DC: 3 ... 7 (AC: 3 ... 5) x I_{rated}	30 to 70 A DC	70 A DC
10 A	Type C	5SY4 110-7	DC: 5 ... 14 (AC: 5 ... 10) x I_{rated}	50 to 140 A DC	140 A DC
13 A	Type A	5SY4 113-5	DC: 2 ... 5 (AC: 2 ... 3) x I_{rated}	26 to 65 A DC	65 A DC
13 A	Type B	5SY4 113-6	DC: 3 ... 7 (AC: 3 ... 5) x I_{rated}	39 to 91 A DC	91 A DC
13 A	Type C	5SY4 113-7	DC: 5 ... 14 (AC: 5 ... 10) x I_{rated}	65 to 182 A DC	182 A DC
16 A	Type A	5SY4 116-5	DC: 2 ... 5 (AC: 2 ... 3) x I_{rated}	32 to 80 A DC	80 A DC
16 A	Type B	5SY4 116-6	DC: 3 ... 7 (AC: 3 ... 5) x I_{rated}	48 to 112 A DC	112 A DC
16 A	Type C	5SY4 116-7	DC: 5 ... 14 (AC: 5 ... 10) x I_{rated}	80 to 224 A DC	224 A DC

Ordering data and tripping characteristics of Siemens single-pole circuit-breakers type 8WA1 011-...

Suitable for up to 60 V DC (250 V AC)

The following space-saving circuit-breaker terminals for mere short-circuit protection can only be snap-mounted on DIN rail EN 50022-35x15. They are also available with an auxiliary switch (1 NO contact and 1 NC contact) and feature higher sensitivity than circuit breakers acc. to IEC 898 (EN 60898), Type B.

Tripping times/ranges are within narrower tolerances than those of circuit-breakers. When operated with DC, these circuit-breaker terminals do not trip at currents below the rated current; from 1.1 times the rated current, the circuit-breaker terminal may trip after as little as 100 ms.

The circuit-breaker rated value must therefore be above the load inrush current peak value. In general, however, the first three milliseconds of the load inrush current may be ignored because no less than 20 to 100 times the rated current is required to trip the circuit-breaker terminals during this period of time.

- The circuit-breaker terminals already trip after 40 ms at 1.2 to 1.9 times the rated DC
- The circuit-breaker terminals already trip after 20 ms at 1.7 to 2.6 times the rated DC
- The circuit-breaker terminals already trip after 12 ms at 2.2 to 3.8 times the rated DC

Ordering data and tripping characteristics of Siemens single-pole circuit-breakers type 8WA1 011-...

Rated current DC	2 A	4 A	6 A	10 A
Order No. (without auxiliary switch)	**8WA1 011-1SF25**	**8WA1 011-1SF26**	**8WA1 011-1SF27**	**8WA1 011-1SF28**
Order No. (with auxiliary switch 1NO + 1NC)	**8WA1 011-6SF25**	**8WA1 011-6SF26**	**8WA1 011-6SF27**	**8WA1 011-6SF28**
Required DC for immediate tripping in 40 ms	2.4 ... 3.8 A	4.8 ... 7.6 A	7.2 ... 11.4 A	12 ... 19 A
Required DC for immediate tripping in 20 ms	3.4 ... 5.2 A	6.8 ... 10.7 A	10.2 ... 15.6 A	17 ... 26 A
Required DC for immediate tripping in approx. 12 ms	4.4 ... 7.6 A	8.8 ... 15.2 A	13.2 ... 22.8 A	22 ... 38 A

For more data, refer to the catalog "Low-voltage switchgear" (Catalog LV 1)

Fusing of the 24 V DC output circuit, selectivity

Miniature circuit-breakers acc. to EN 60898 (DIN VDE 0641 T11) in 24 V DC circuits, which are powered by SITOP modular or SITOP smart power supplies

Order No.	$I_{out\ rated}$	$I_{out\ dyn}$	$I >$	Characteristic A									
				1 A	1.6 A	2 A	3 A	4 A	6 A	8 A	10 A	13 A	16 A
6EP1332-2BA10	2.5 A	7 A/ 200 ms	5.8 A/ 200 ms	✓	❍	❍	❍	❍	❍	❍	❍	❍	❍
6EP1333-3BA00	5 A	15 A/ 25 ms	12.5 A/ 25 ms	✓	✓	✓	❍	❍	❍	❍	❍	❍	❍
6EP1333-2BA01	5 A	17 A/ 200 ms	14.5 A/ 200 ms	✓	✓	✓	❍	❍	❍	❍	❍	❍	❍
6EP1333-2AA01	5 A	17 A/ 200 ms	14.5 A/ 200 ms	✓	✓	✓	❍	❍	❍	❍	❍	❍	❍
6EP1334-3BA00	10 A	30 A/ 25 ms	25 A/ 25 ms	✓	✓	✓	✓	✓	❍	❍	❍	❍	❍
6EP1334-2BA01	10 A	33 A/ 200 ms	28 A/ 200 ms	✓	✓	✓	✓	✓	✓	❍	❍	❍	❍
6EP1334-2AA01	10 A	33 A/ 200 ms	28 A/ 200 ms	✓	✓	✓	✓	✓	✓	❍	❍	❍	❍
6EP1336-3BA00	20 A	60 A/ 25 ms	50 A/ 25 ms	✓	✓	✓	✓	✓	✓	✓	✓	❍	❍
6EP1436-3BA01	20 A	60 A/ 25 ms	50 A/ 25 ms	✓	✓	✓	✓	✓	✓	✓	✓	❍	❍
6EP1436-3BA00	20 A	60 A/ 25 ms	50 A/ 25 ms	✓	✓	✓	✓	✓	✓	✓	✓	❍	❍
6EP1457-3BA00	20 A	60 A/ 25 ms	50 A/ 25 ms	✓	✓	✓	✓	✓	✓	✓	✓	❍	❍
6EP1337-3BA00	40 A	120 A/ 25 ms	100 A/ 25 ms	✓	✓	✓	✓	✓	✓	✓	✓	✓	✓
6EP1437-3BA00	40 A	120 A/ 25 ms	100 A/ 25 ms	✓	✓	✓	✓	✓	✓	✓	✓	✓	✓

$I_{out\ rated}$: rated output current
$I_{out\ dyn}$: dynamic overcurrent at short-circuit in operation
$I >$ for selective tripping in practice to provide permanent current ($I > = I_{out\ dyn} - 0.5 \times I_{out\ rated}$)
✓: immediate tripping within 12 ms possible
❍: immediate tripping within 12 ms not possible

Characteristic B				Characteristic C									
6 A	10 A	13 A	16 A	1 A	1.6 A	2 A	3 A	4 A	6 A	8 A	10 A	13 A	16 A
❍	❍	❍	❍	❍	❍	❍	❍	❍	❍	❍	❍	❍	❍
❍	❍	❍	❍	❍	❍	❍	❍	❍	❍	❍	❍	❍	❍
❍	❍	❍	❍	✓	❍	❍	❍	❍	❍	❍	❍	❍	❍
❍	❍	❍	❍	✓	❍	❍	❍	❍	❍	❍	❍	❍	❍
❍	❍	❍	❍	✓	✓	❍	❍	❍	❍	❍	❍	❍	❍
❍	❍	❍	❍	✓	✓	✓	❍	❍	❍	❍	❍	❍	❍
❍	❍	❍	❍	✓	✓	✓	❍	❍	❍	❍	❍	❍	❍
✓	❍	❍	❍	✓	✓	✓	✓	❍	❍	❍	❍	❍	❍
✓	❍	❍	❍	✓	✓	✓	✓	❍	❍	❍	❍	❍	❍
✓	❍	❍	❍	✓	✓	✓	✓	❍	❍	❍	❍	❍	❍
✓	❍	❍	❍	✓	✓	✓	✓	❍	❍	❍	❍	❍	❍
✓	✓	✓	❍	✓	✓	✓	✓	✓	✓	❍	❍	❍	❍
✓	✓	✓	❍	✓	✓	✓	✓	✓	✓	❍	❍	❍	❍

Standards and approvals

Important standards and approvals in the overview

EN	European standards
EN 50178	Electronic equipment for use in power installations
EN 55022	Information technology equipment – Radio disturbance characteristics – Limits and methods of measurement
EN 60950-1	Information technology equipment – Safety
EN 61000-3-2	Electromagnetic compatibility (EMC) – Part 3-2: Limits for harmonic current emissions (equipment input current ≤ 16 A per phase)
EN 61000-6-2	Electromagnetic compatibility (EMC) – Part 6-2: Generic standards – Immunity for industrial environments
EN 61000-6-3	Electromagnetic compatibility (EMC) – Part 6-3: Generic standards – Emission standard for residential, commercial and light industrial environments
EN 60721	Classification of environmental conditions
UL	**Underwriters Laboratories**
UL 508	Industrial control equipment
UL 1604	Electrical equipment for use in class I and class II, division 2, and class III hazardous (classified) locations
UL 60950-1	Information technology equipment – Safety
CSA	**Canadian Standards Association**
CSA C22.2 No. 14	Industrial control equipment
CSA C22.2 No. 142	Process control equipment
CSA C22.2 No. 60950-1	Information technology equipment – Safety
ATEX	**Equipment and protective systems intended for use in Potentially Explosive Atmospheres**
FM	**Factory Mutual Research**
ABS	**American Bureau of Shipping**
GL	**Germanischer Lloyd**

Dimension drawings

15

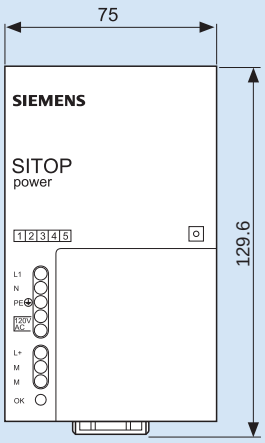

Dimension drawings

SITOP 24 V
Single-phase, two-phase, three-phase

Dimensions in mm

Order No.: **6EP1 331-2BA10, 6EP1 731-2BA00**

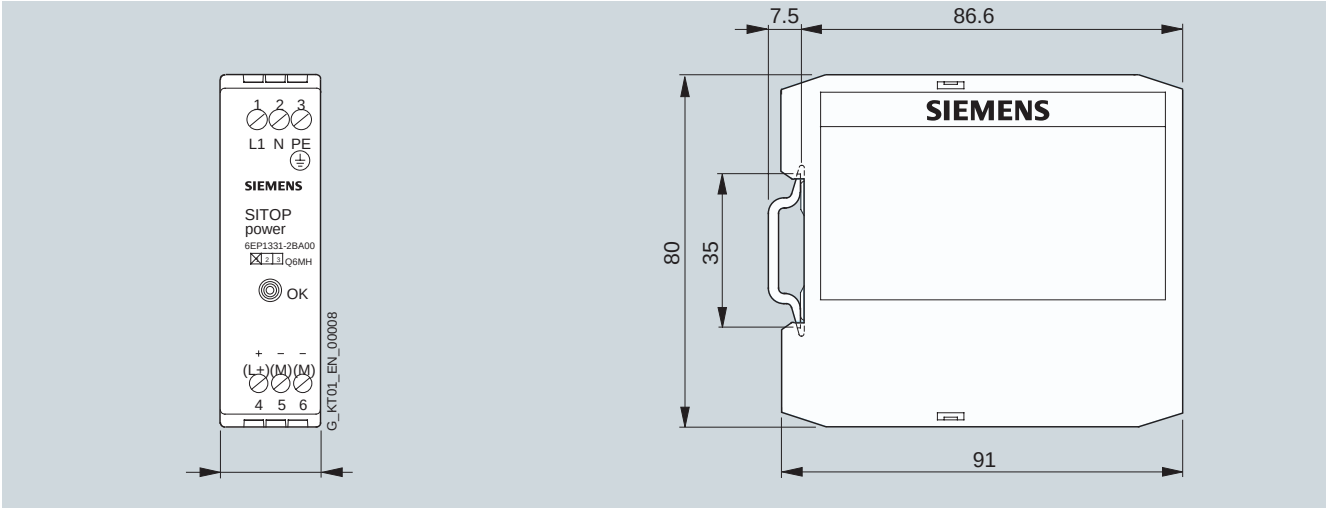

Order No.: **6EP1 332-2BA10**

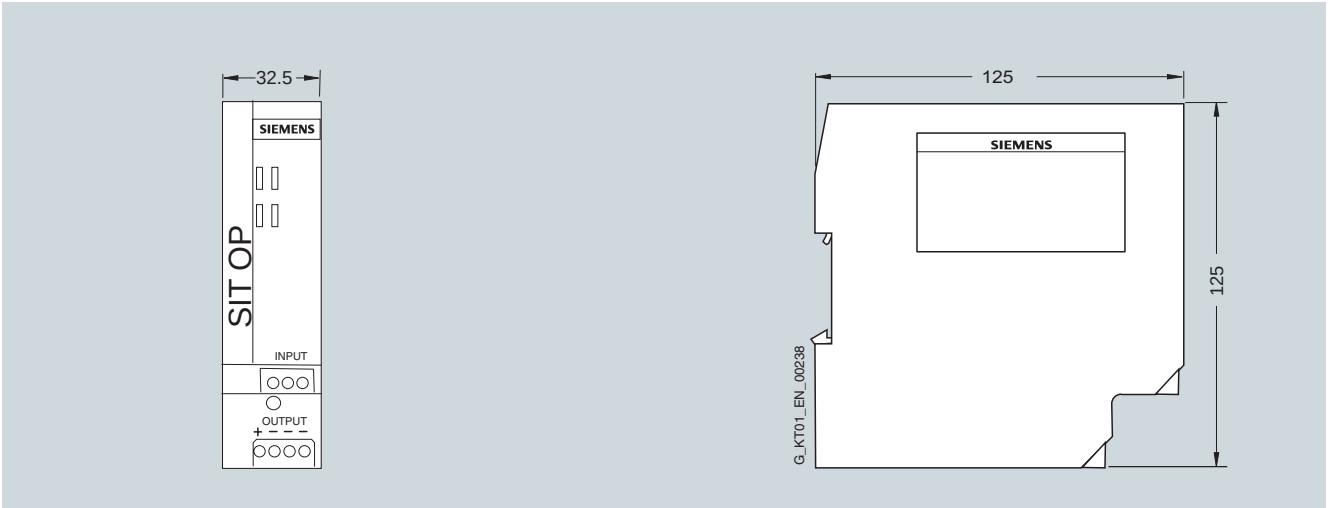

Order No.: **6ES7 307-1BA00-0AA0**

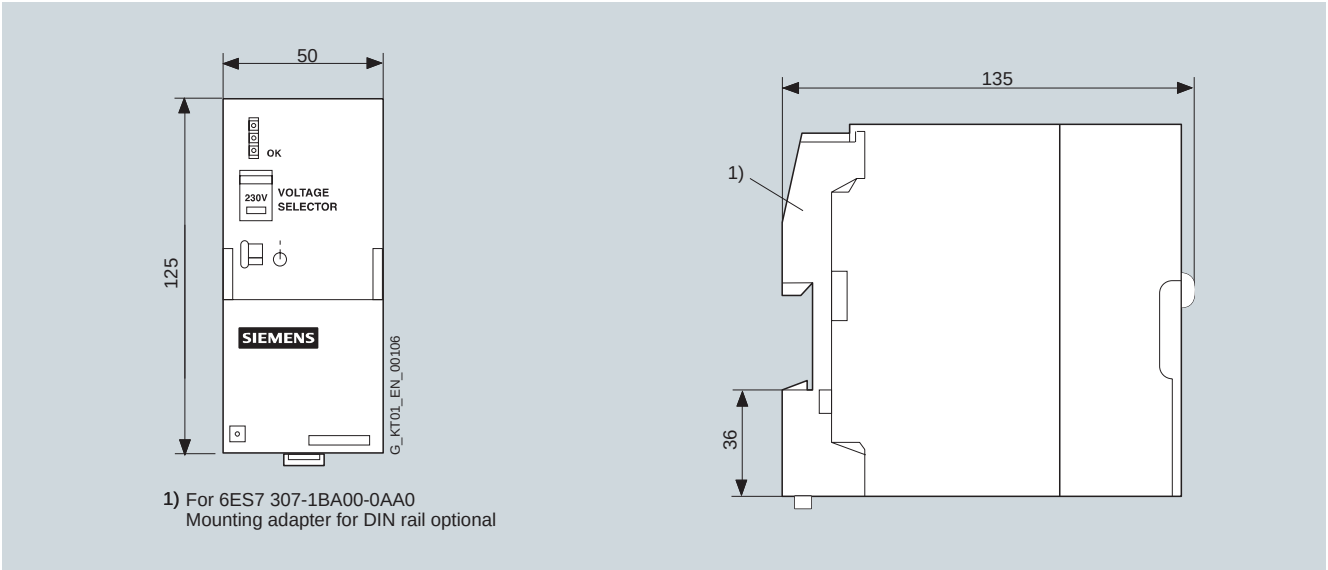

1) For 6ES7 307-1BA00-0AA0
Mounting adapter for DIN rail optional

Dimensions in mm

Order No.: **6ES7 305-1BA80-0AA0, 6ES7 307-1EA00-0AA0, 6ES7 307-1EA80-0AA0**

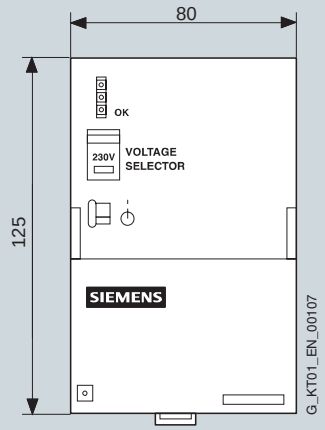

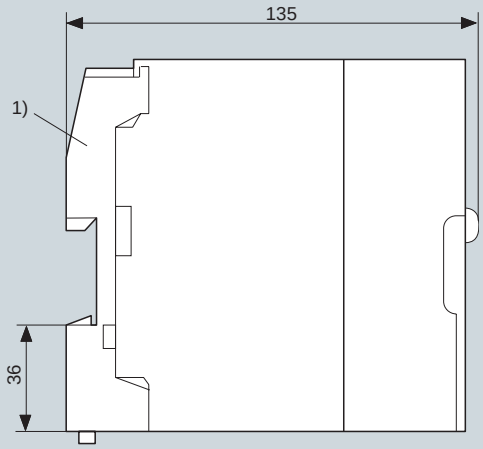

1) For 6ES7 305-1BA80-0AA0, 6ES7 307-1EA00-0AA0, 6ES7 307-1EA00-0AA0
Mounting adapter for DIN rail optional

Order No.: **6EP1 732-0AA00, 6EP1 332-1SH12, 6EP1 332-1SH22**

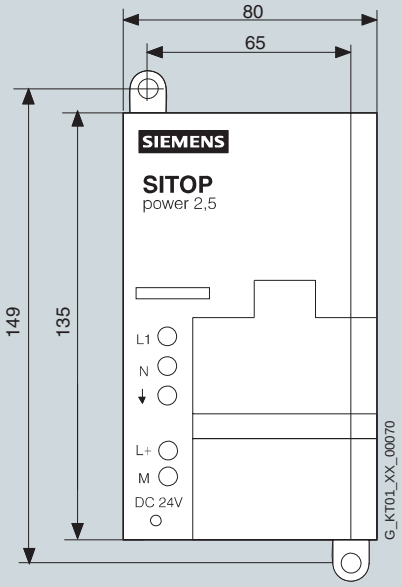

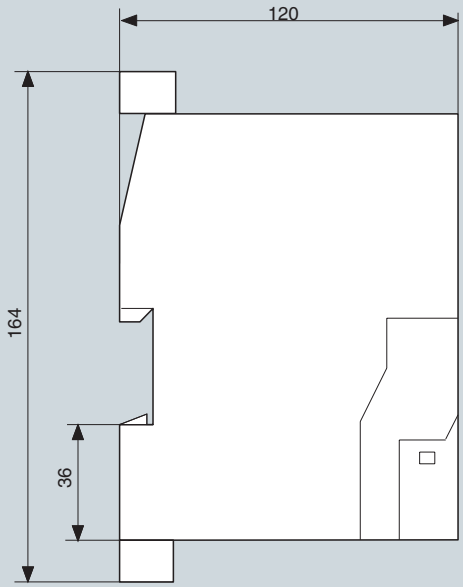

Order No.: **6EP1 332-1SH31**

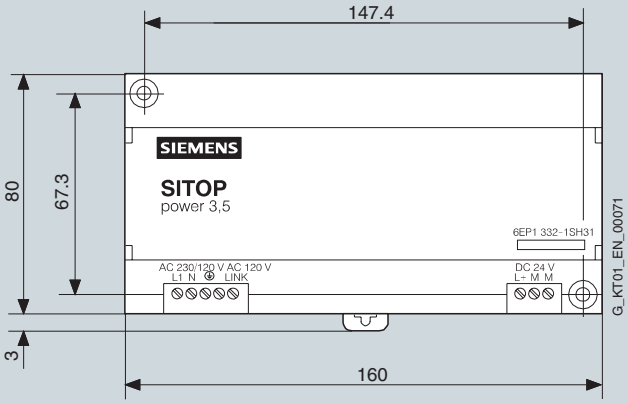

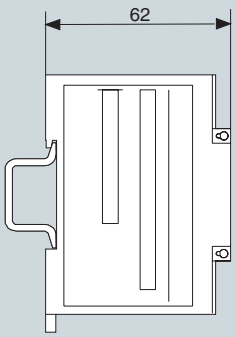

Dimension drawings

SITOP 24 V
Single-phase, two-phase, three-phase

Dimensions in mm

Order No.: **6EP1 332-2BA00**

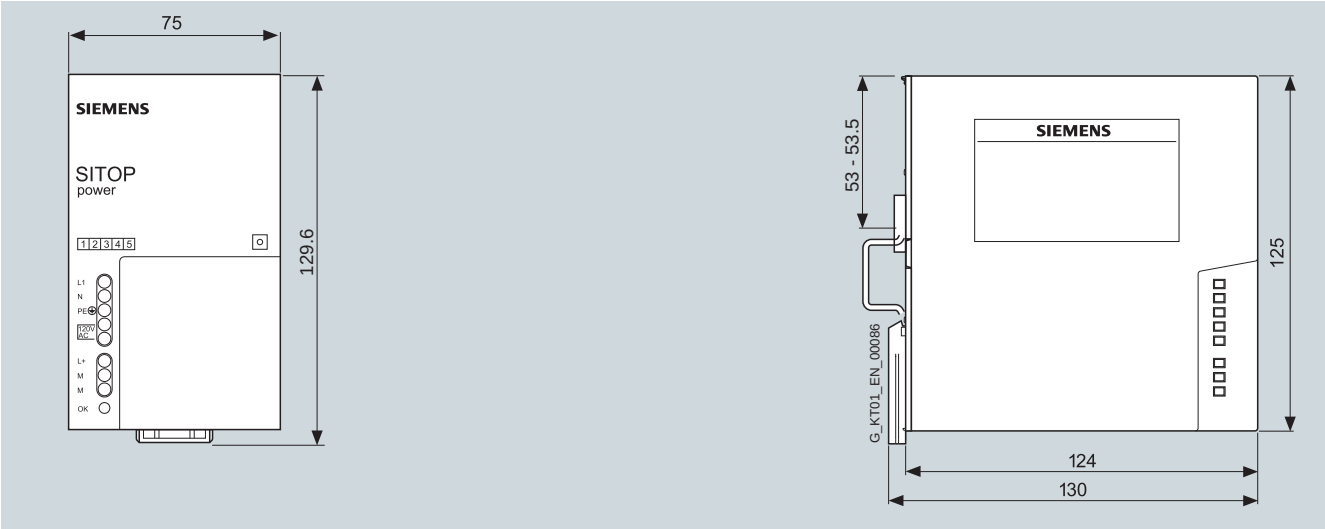

Order No.: **6EP1 333-3BA00**

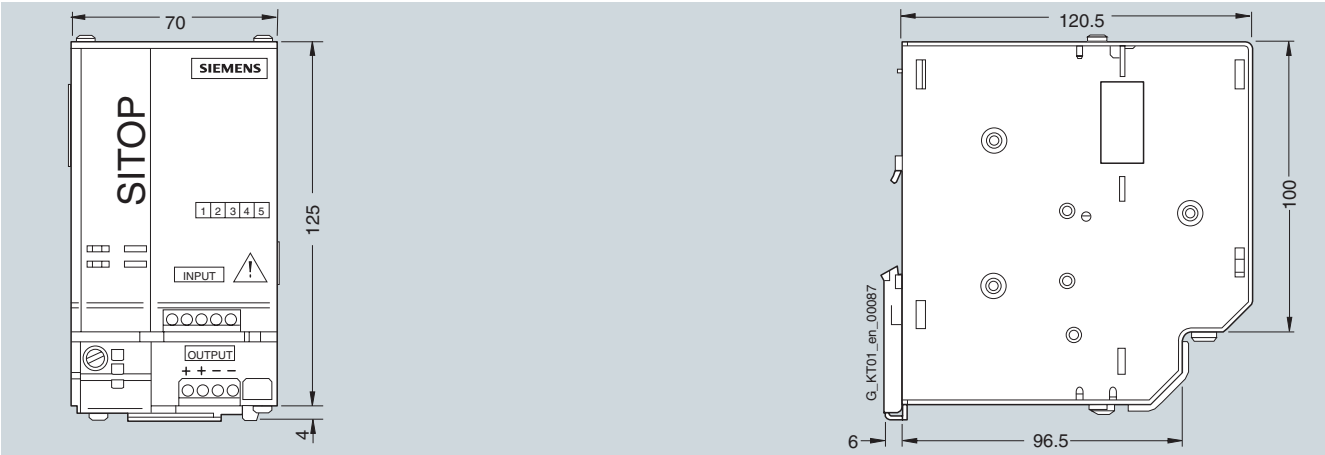

Order No.: **6EP1 333-2AA01, 6EP1 333-2BA01**

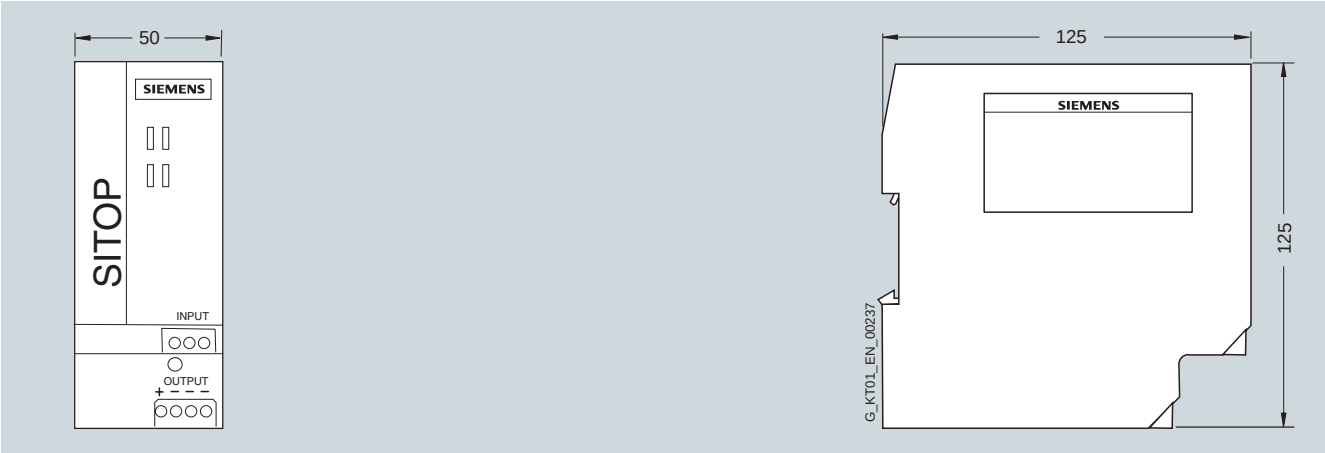

Dimensions in mm

Order No.: **6EP1 333-1AL12, 6EP1 334-1AL12**

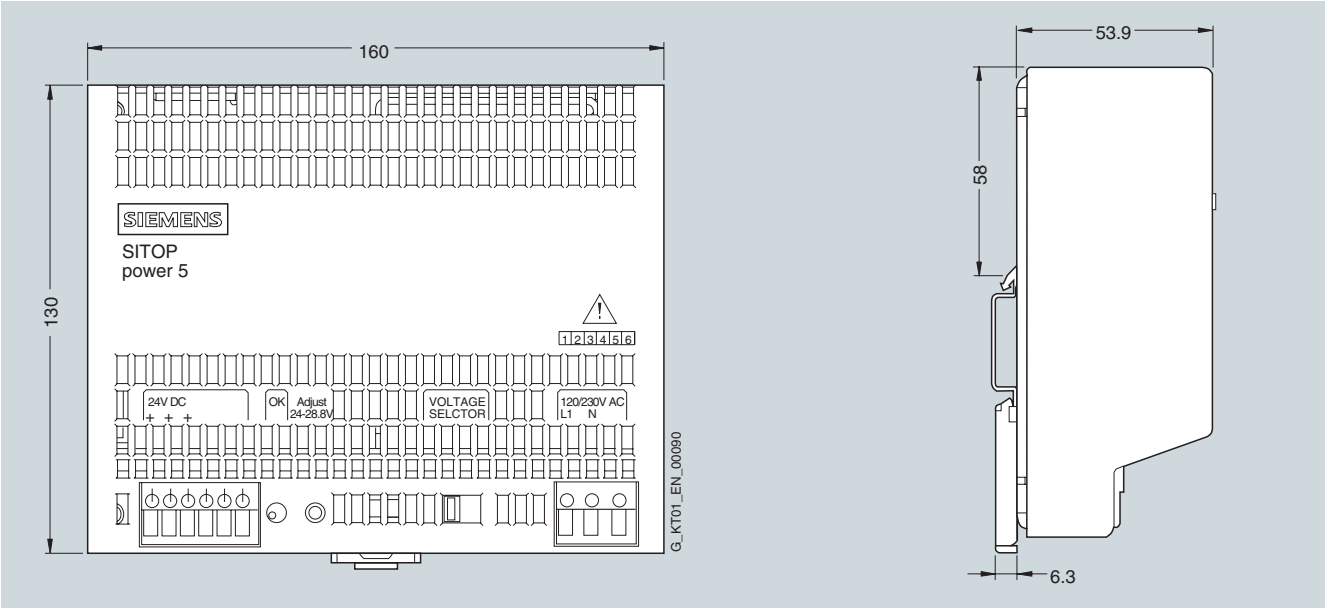

Order No.: **6EP1 334-3BA00**

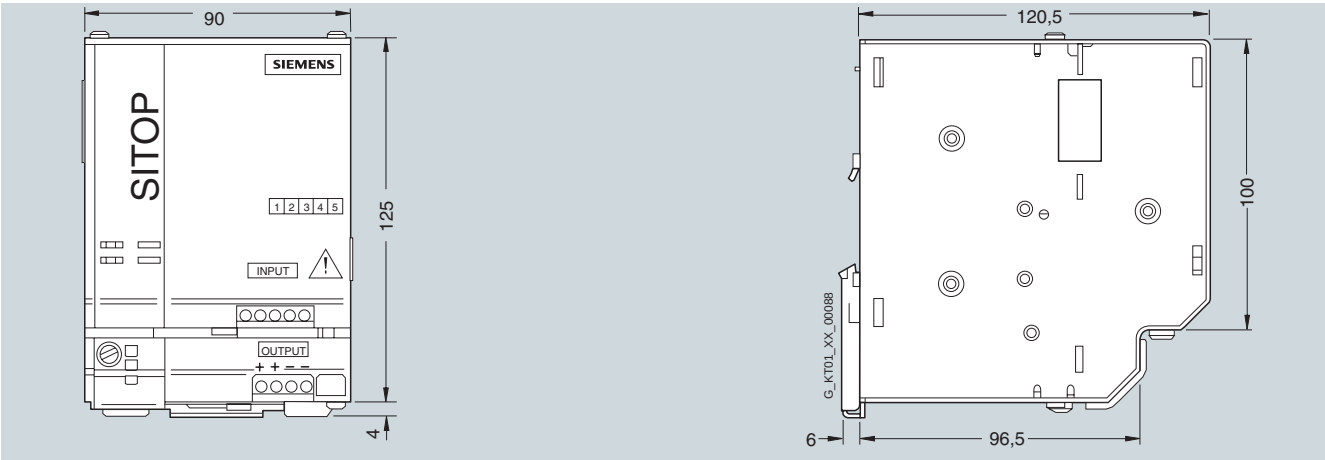

Order No.: **6EP1 334-2AA01, 6EP1 334-2BA01**

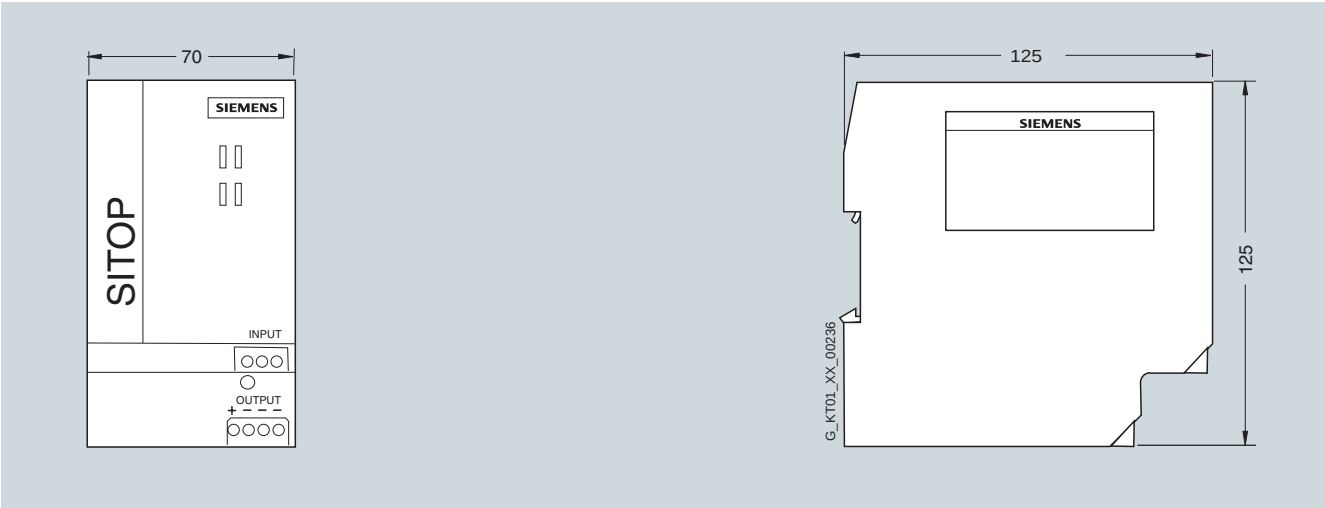

Dimension drawings

SITOP 24 V
Single-phase, two-phase, three-phase

Dimensions in mm

Order No.: **6ES7 307-1KA01-0AA0, 6EP1 334-1SH01**

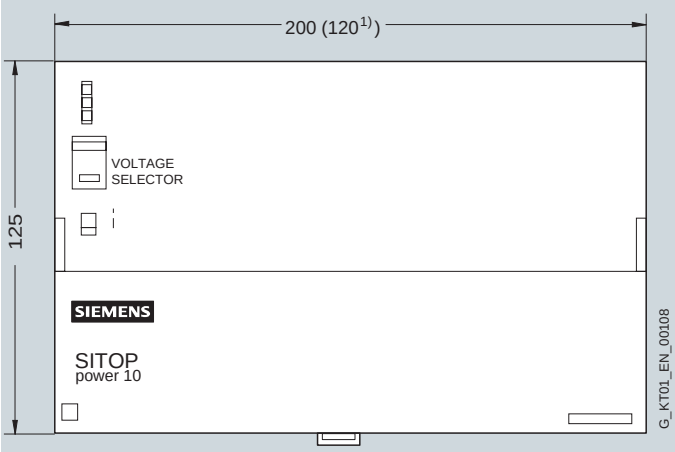

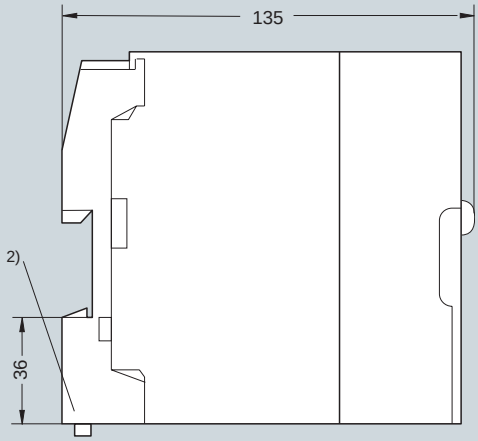

1) 6ES7 307-1KA01-0AA0

2) For 6ES7 307-1KA01-0AA0
Mounting adapter for DIN rail optional

Order No.: **6EP1 336-3BA00, 6EP1 436-3BA00**

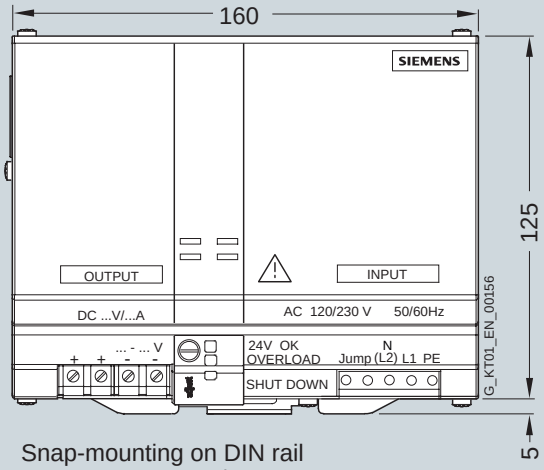

Snap-mounting on DIN rail
EN 60715 35 x 7.5/15

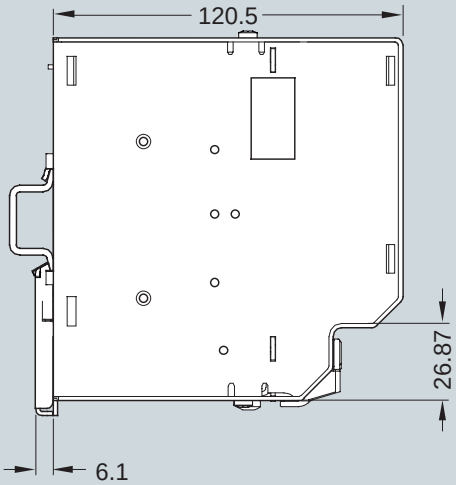

Order No.: **6EP1 337-3BA00, 6EP1 437-3BA00**

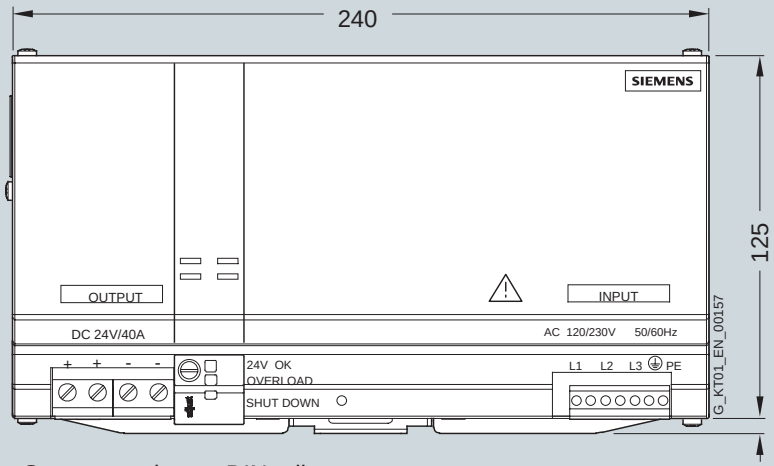

Snap-mounting on DIN rail
EN 60715 35 x 7.5/15

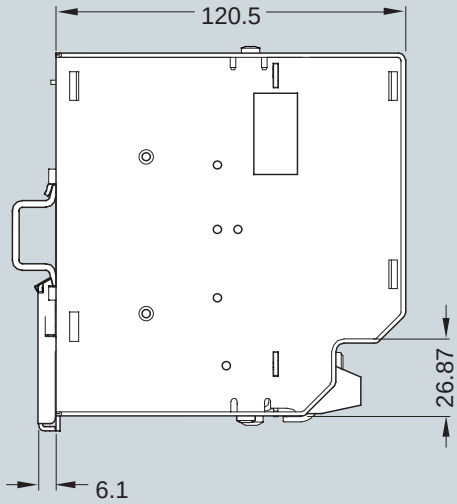

Dimensions in mm

Order No.: **6EP1 436-3BA01**

Order No.: **6EP1 434-2BA00, 6EP1 436-2BA00**

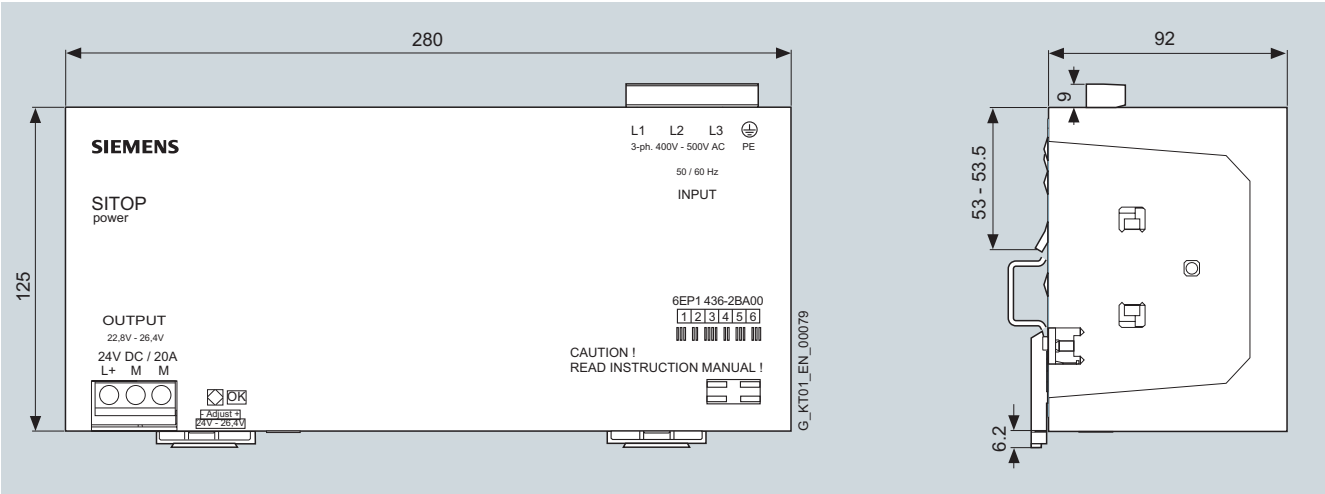

Order No.: **6EP1 437-2BA00, 6EP1 437-2BA10**

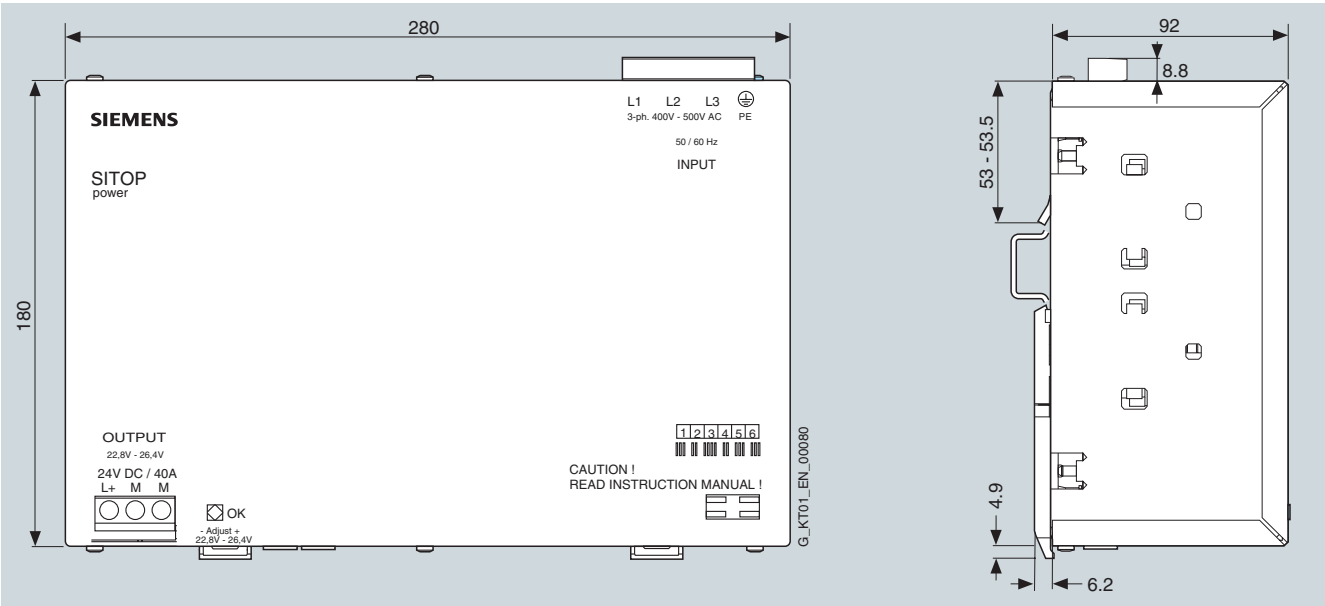

Dimension drawings

SITOP
Add-on modules

Dimensions in mm

Order No.: **6EP1 961-3BA10**

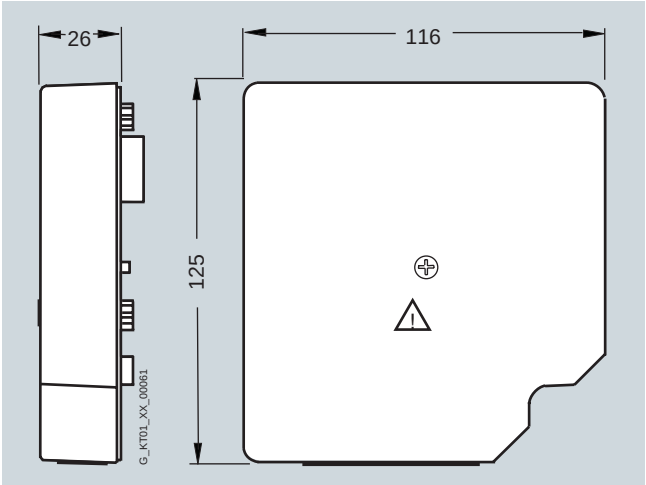

Order No.: **6EP1 961-3BA00**

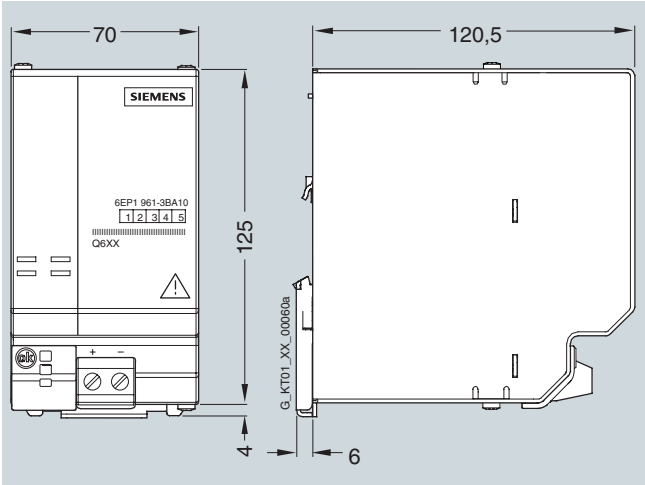

Order No.: **6EP1 961-3BA20**

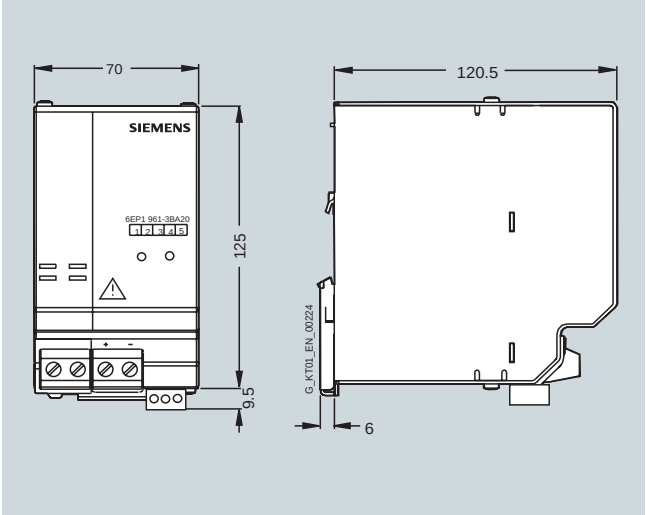

Order No.: **6EP1 961-2BA00**

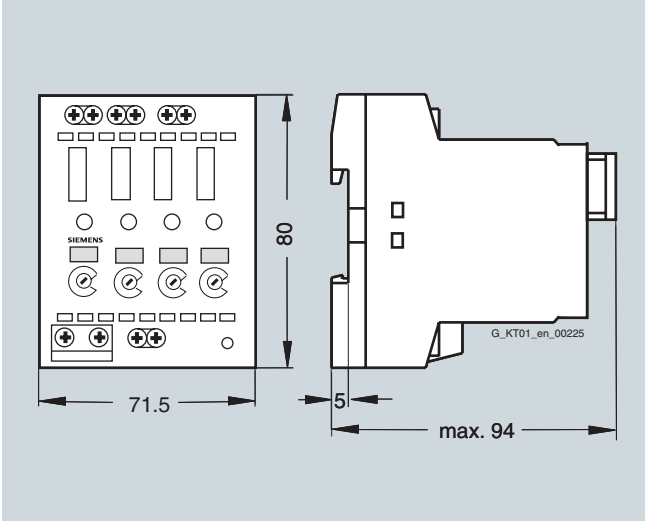

Dimensions in mm

Order No.: **6EP1 971-1AA01**

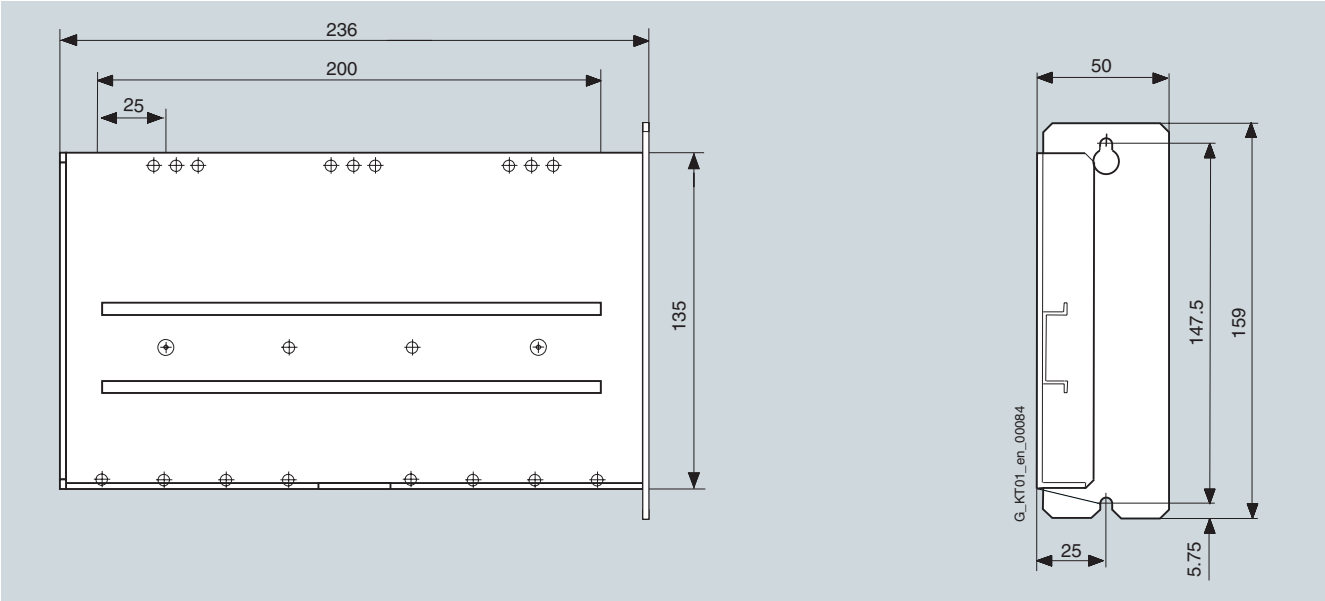

Order No.: **6EP1 971-2BA00**

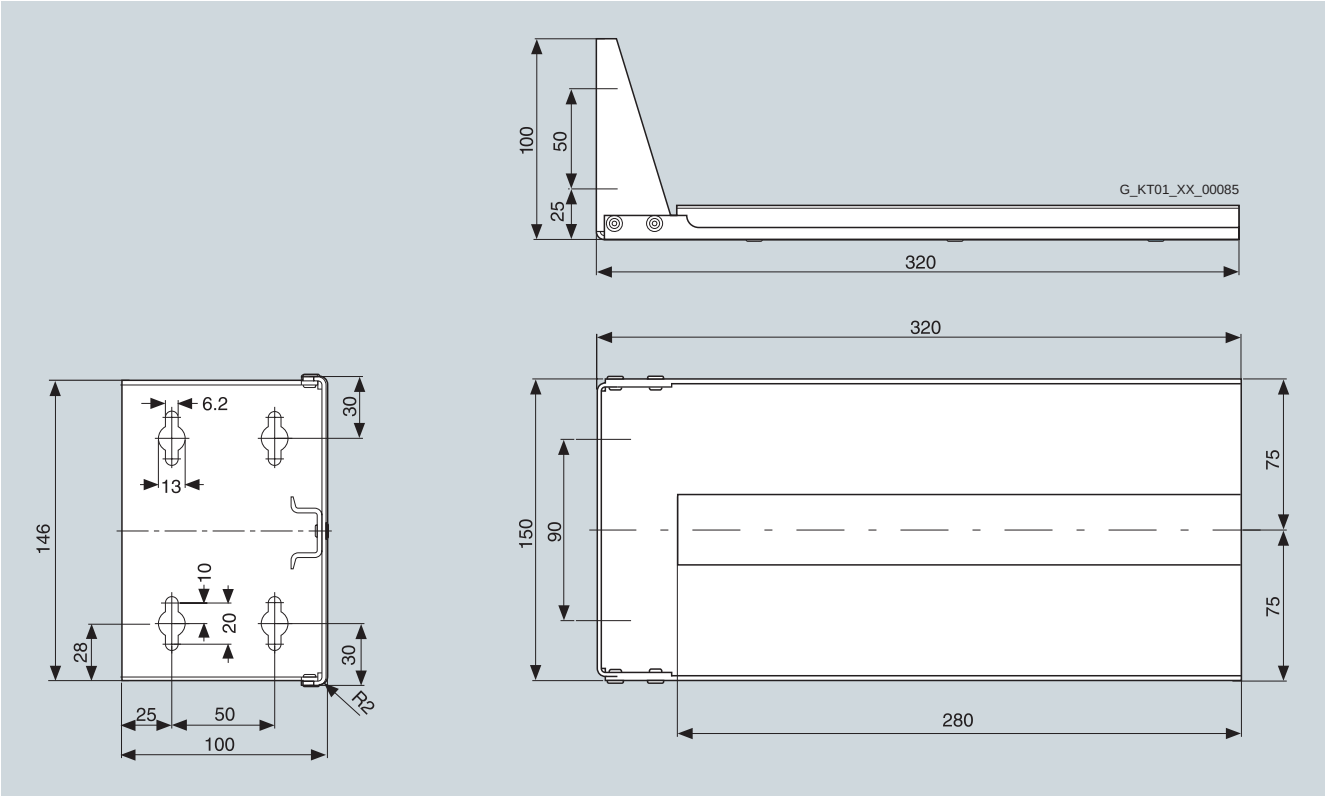

Dimension drawings

SITOP 24 V
Uninterruptible power supplies

Dimensions in mm

Order No.: **6EP1 931-2DC21, 6EP1 931-2DC31, 6EP1 931-2DC42**
Order No.: **6EP1 931-2EC21, 6EP1 931-2EC31, 6EP1 931-2EC42**

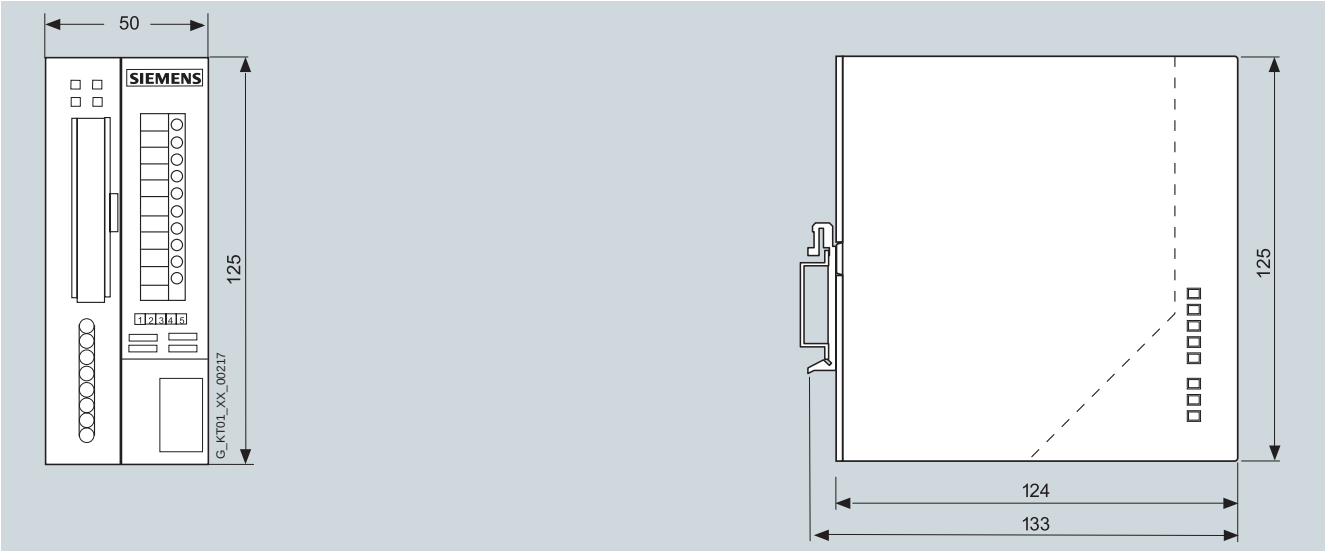

Order No.: **6EP1 931-2FC21, 6EP1 931-2FC42**

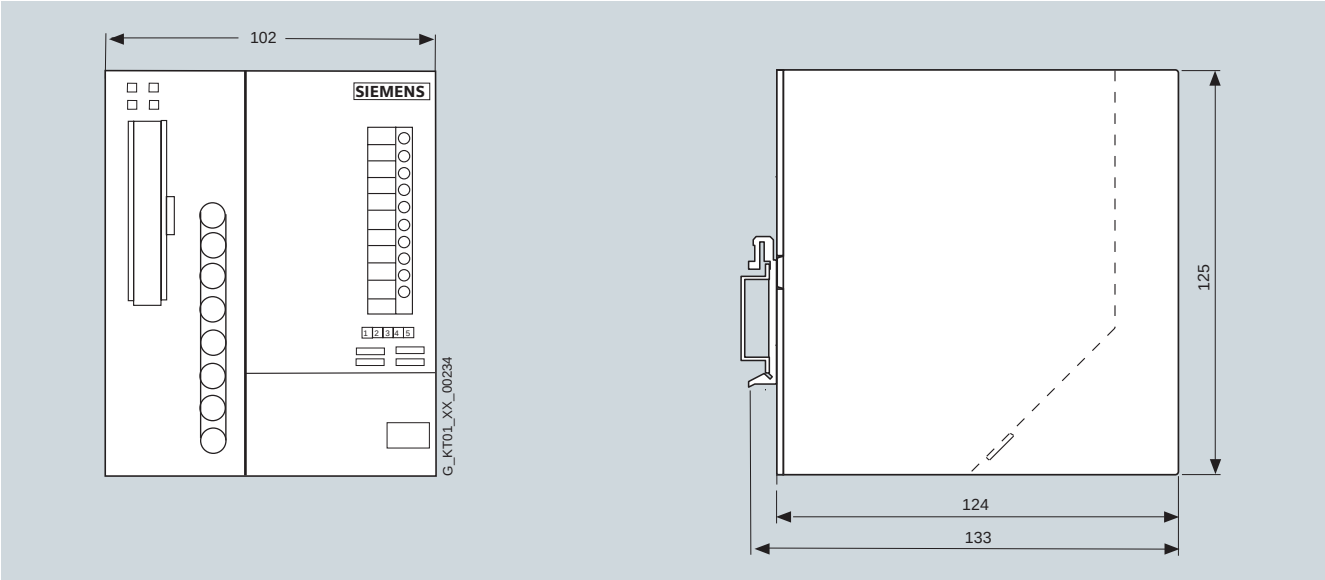

Dimensions in mm

Order No.: **6EP1 935-6MD31**

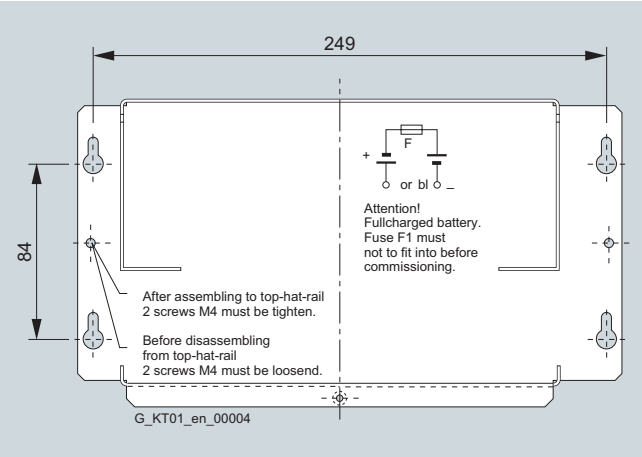

Order No.: **6EP1 935-6MD11**

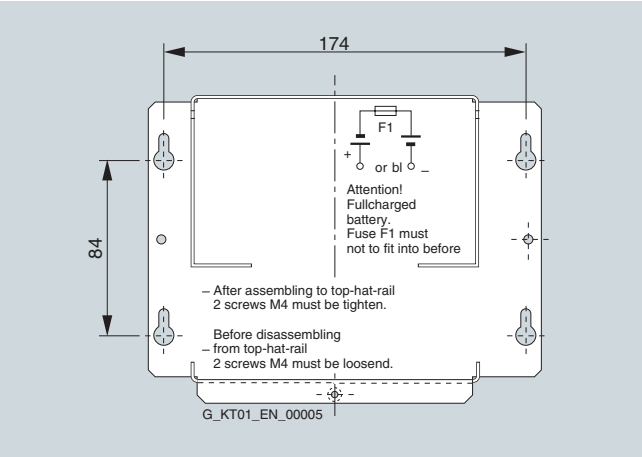

Order No.: **6EP1 935-6ME21**

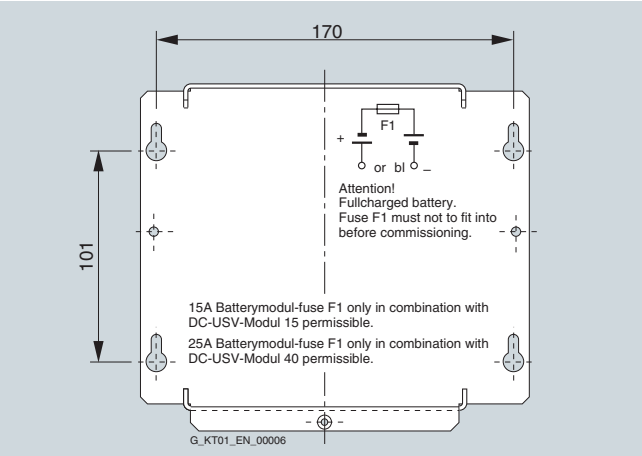

Order No.: **6EP1 935-6MF01**

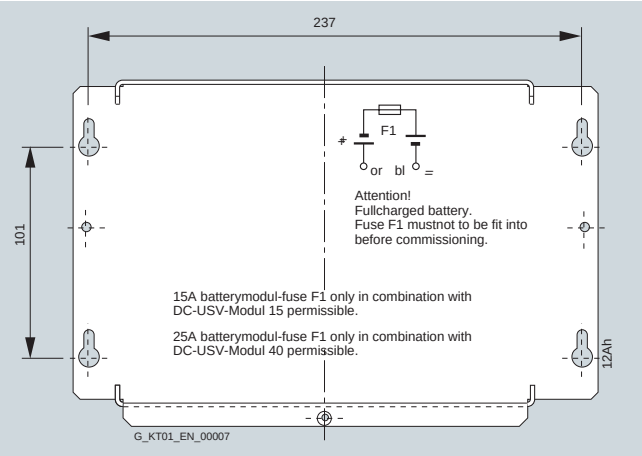

Order No.: **6EP1 935-6MC01**

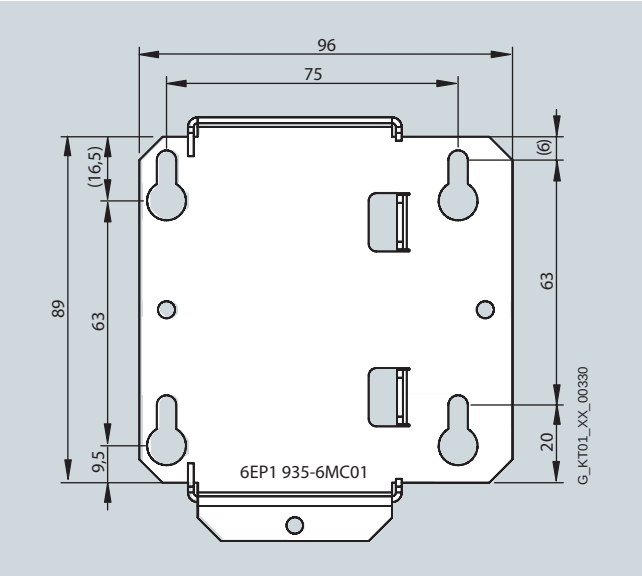

Dimension drawings

SITOP
alternative voltages

Dimensions in mm

Order No.: **6EP1 353-2BA00, 6EP1 353-0AA00**

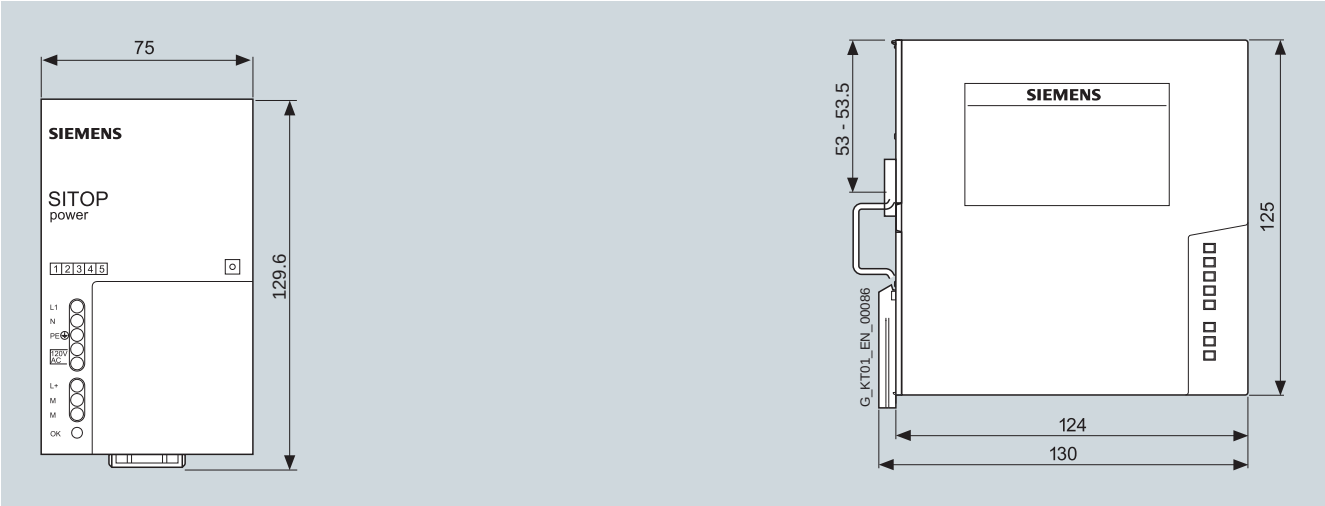

Order No.: **6EP1 456-2BA00**

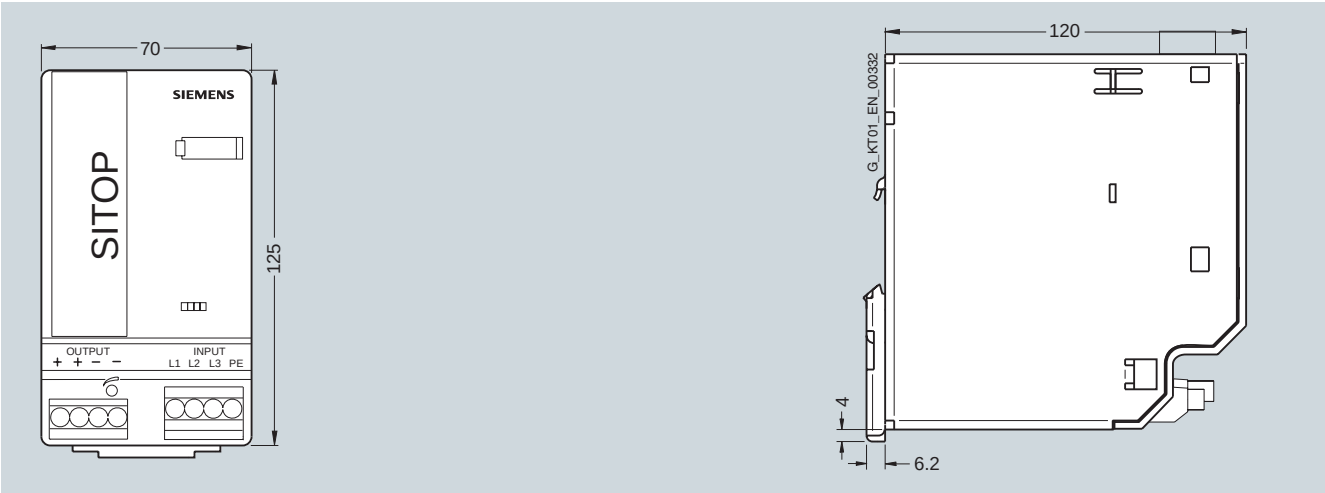

Order No.: **6EP1 457-3BA00**

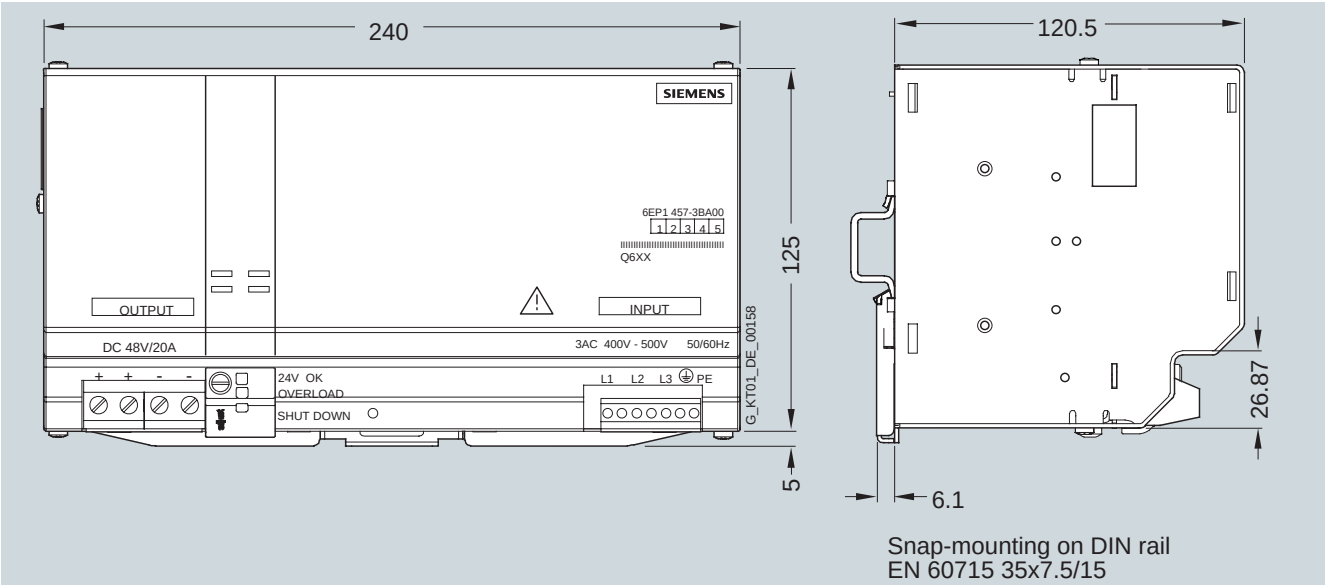

Dimensions in mm

Order No.: **6EP1 311-1SH02, 6EP1 321-1SH02, 6EP1 351-1SH02, 6EP1 331-1SH02**

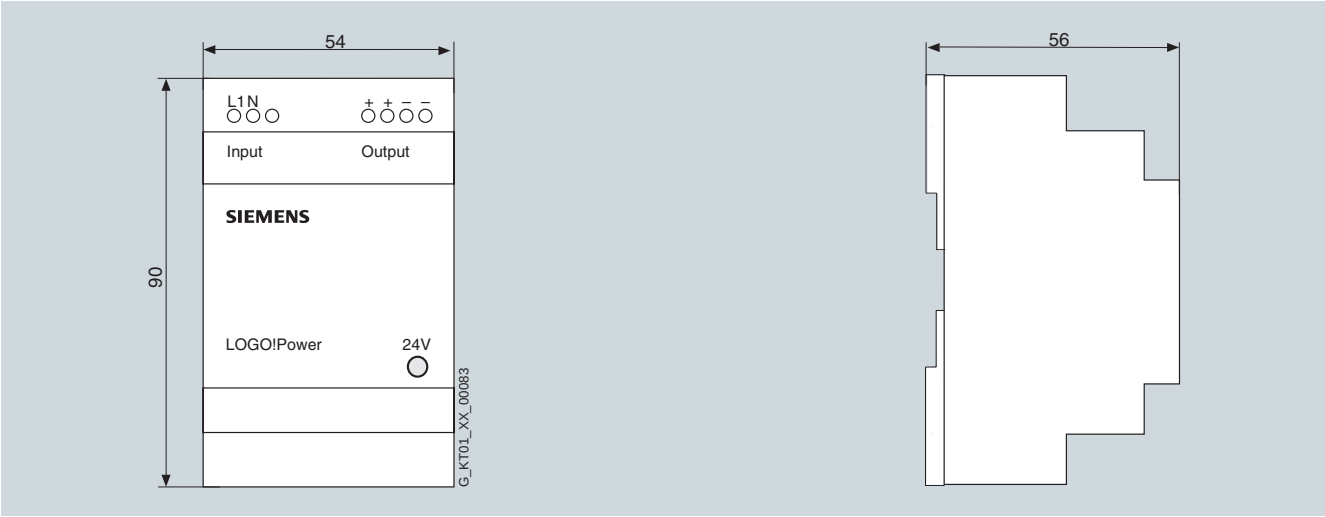

Order No.: **6EP1 311-1SH12, 6EP1 322-1SH02, 6EP1 352-1SH02, 6EP1 332-1SH42**

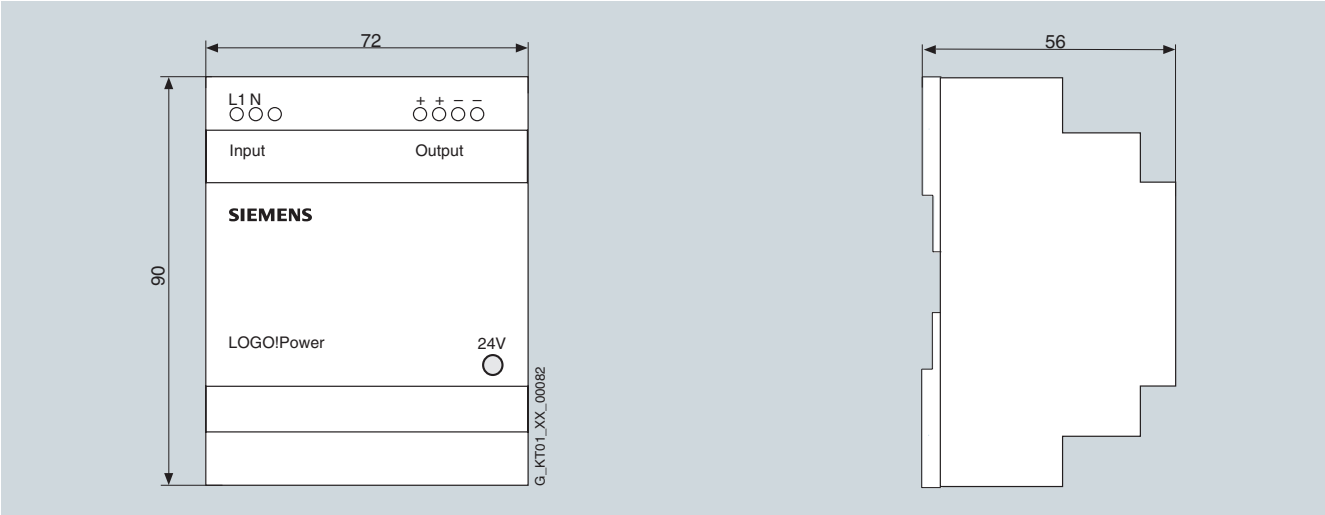

Order No.: **6EP1 332-1SH51**

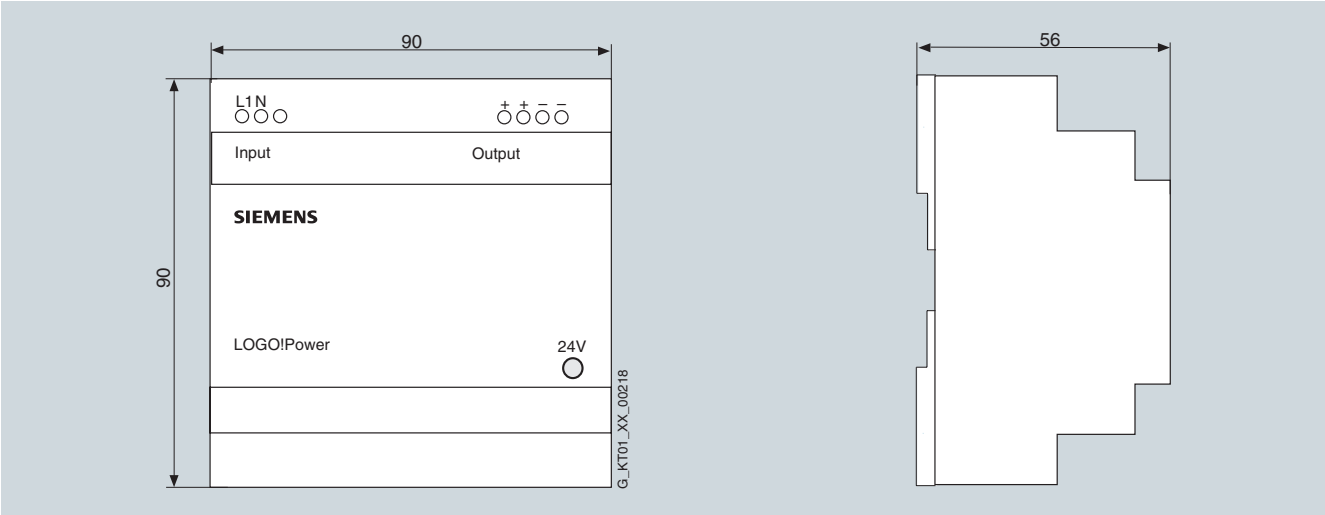

Dimension drawings

SITOP PSA 100E

Dimensions in mm

Order No.: **6EP1 232-1AA00, 6EP1 232-1AA10, 6EP1 233-1AA00, 6EP1 234-1AA00**

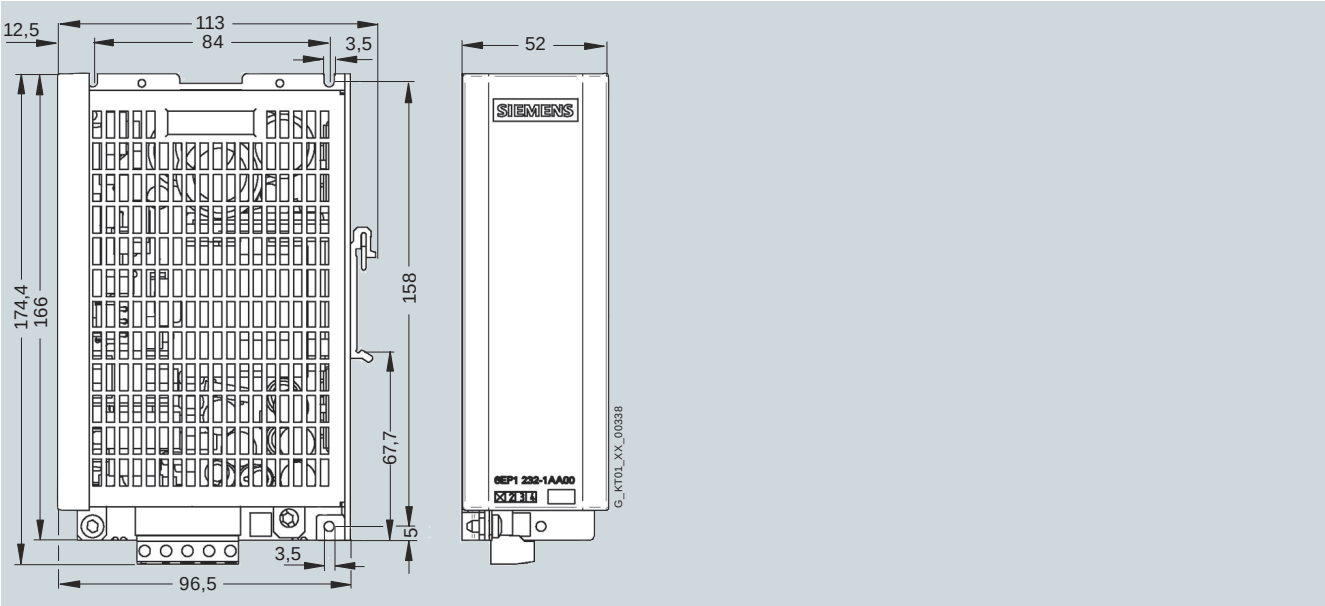

Appendix

16

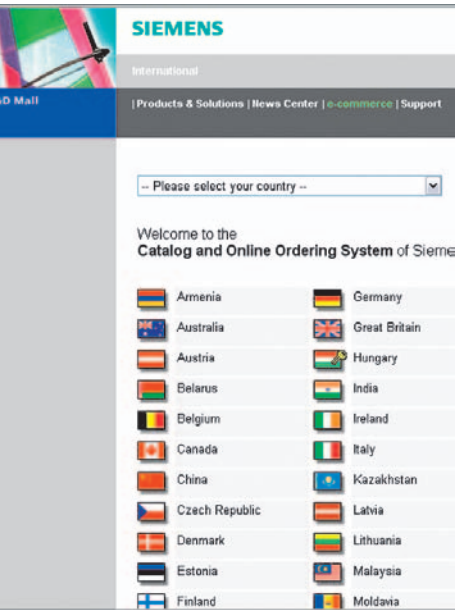

Order No. index

Subject index

Siemens contact partners worldwide

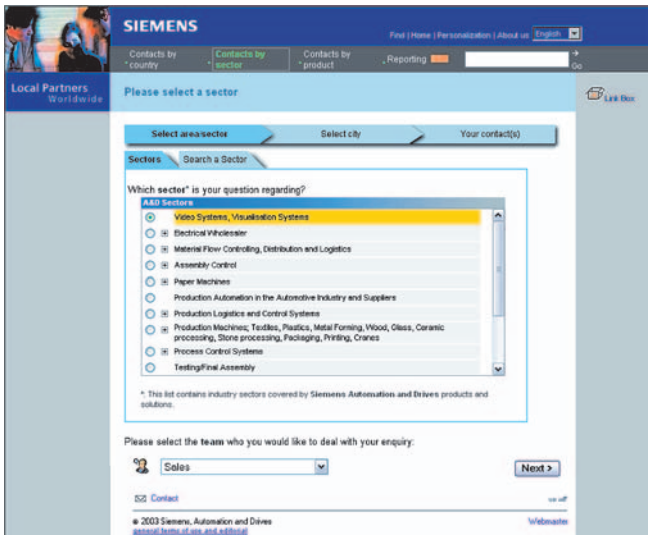

Visit

http://www.siemens.com/automation/partner

to find Siemens contacts for specific technologies worldwide.

Wherever possible, you will find a local contact partner for:

- Technical support
- Spare parts/repairs
- Service
- Training
- Sales
- Specialist support/engineering

The selection procedure starts with:

- a country
- a product or
- a sector.

Once the remaining criteria have been laid down, the required contact will be shown along with the associated area of expertise.

Siemens Industry Automation and Motion Control in the WWW

Detailed knowledge of the range of products and services available is essential when planning and configuring automation systems. It goes without saying that this information must always be fully up-to-date.

Siemens Industry Automation and Motion Control has therefore built up a comprehensive range of information in the World Wide Web which offers quick and easy access to all data required.

Visit

http://www.siemens.com/automation

to find everything you need to know about the products, systems and services available.

Product selection with the offline mall

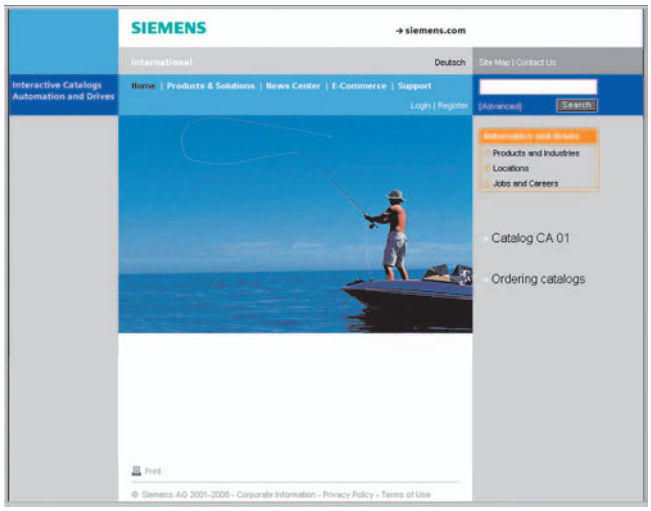

Detailed information together with convenient interactive functions:
The CA 01 Offline Mall, with over 80,000 products, offers a comprehensive overview of the Siemens Automation and Drives range.

Here you can find everything that you need to solve tasks in the fields of automation, switchgear, installation systems and drives. All information is integrated into a user interface which is easy to work with and intuitive.

After selecting the product of your choice you can order at the press of a button by fax or by online link.

Information on the CA 01 Offline Mall is available on the Internet at

http://www.siemens.com/automation/ca01

or on CD-ROM or DVD.

Easy shopping with the A&D Mall

The A&D Mall is Siemens AG's virtual supermarket on the Internet. Here you have access to a huge range of products presented in electronic catalogs in an informative and attractive way.

Data transfer via EDIFACT allows the whole procedure from selection through ordering to tracking of the order to be carried out online via the Internet.

Numerous functions are available to support you.

For example, powerful search functions make it easy to find the required products, which can be immediately checked for availability. Customer-specific discounts and preparation of quotes can be carried out online as well as order tracking and tracing.

Please visit the A&D Mall on the Internet at:

http://www.siemens.com/automation/mall

Our services for every phase of the project

In fierce competition optimum qualifications are needed to get ahead and stay ahead:
a strong starting position, an ingenious strategy and an excellent support team – at every stage.
Service & Support from Siemens provides this support with a full palette of different services for automation and drives.

At every stage: From the planning stage through commissioning to maintenance and modernization.

Our specialists know exactly where they have to act in order to maintain the productivity and efficiency of your plant.

Online Support

The comprehensive Internet-based information system, which is available round the clock, provides product support, services, and support tools in the shop.

http://www.siemens.com/automation/service&support

Technical Support

Competent consultation about technical matters with a wide range of product- and system-related services to meet your requirements.

Phone: +49 (0)180 50 50 222
Fax: +49 (0)180 50 50 223
(0.14 €/minute from German landlines)

http://www.siemens.com/automation/support-request

Technical Consulting

Support with the planning and design of your project: From detailed analysis of the current situation and definition of objectives through advice on products and systems to designing the automation solution. [1)]

Project engineering and software engineering

Support with project engineering and development with services tailored to requirements from configuration through to implementation of an automation project. [1)]

Field Service

With our field service we provide services for commissioning and repair which are an important prerequisite for ensuring availability.

In Germany Tel.:
0180 50 50 444 [1)]
(0.14 €/minute from German landlines)

Repairs and spare parts

During normal operation of a machine or automation system, we provide a comprehensive spare parts and repair service that offers you the best possible operational reliability.

In Germany Tel.:
0180 50 50 446 [1)]
(0.14 €/minute from German landlines)

Optimization and modernization

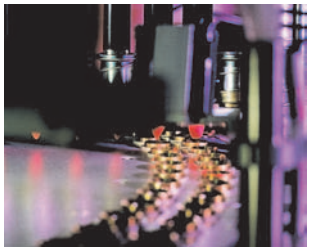

To increase productivity or to save costs in your project, we offer high-quality services for optimization and modernization. [1)]

1) You will find telephone numbers for other countries on our Internet page http://www.siemens.com/automation/service&support

Knowledge Base on CD-ROM

For operating sites without online access to the Internet a copy of the free information area is available on CD-ROM (Service & Support Knowledge Base). This CD-ROM contains all product information (FAQs, downloads, tips and tricks, latest news) available at the time of compilation as well as information on service and technical support.

Also on the CD-ROM is a full-text search engine and our Knowledge Manager for finding the right solutions. The CD-ROM is updated every 4 months.

Just like our Internet online knowledge base, the CD Service & Support Knowledge Base is available complete in 5 languages (German, English, French, Italian, Spanish).

You can order the CD **Service and Support Knowledge Base** from your Siemens contact.

Order No.: **6ZB5310-0EP30-0BA2**

Ordering online
(with Automation Value Card or credit card) at:

http://www.siemens.com/automation/service&support

in the shop section.

Automation Value Card

Small card - big support

The Automation Value Card is an integral part of the service concept with which Siemens Automation and Drives supports your entire automation project at every stage.

Whether you need our technical support services or high-quality support tools from our online shop: You can always pay with your Automation Value Card. No accounting charges, transparent and secure. Because with your confidential card number and related PIN, you can view your current account and all credit transactions at any time.

Services on the card. This is how it works.

Card number and PIN are applied to the back of the Automation Value Card. On the newly delivered card the PIN is concealed under a scratch-off strip to guarantee the full credit balance on the card.

By stating the card number and PIN you have full access to the available customer support services. The charge for the service provided will be deducted from the balance on your Automation Value Card in the form of credits.

All the services offered can be paid for by credit in neutral units, so that you can use the Automation Value Card anywhere in the world.

Product codes of the Automation Value Card	
Credits	Order No.
200	**6ES7 997-0BA00-0XA0**
500	**6ES7 997-0BB00-0XA0**
1000	**6ES7 997-0BC00-0XA0**
10000	**6ES7 997-0BG00-0XA0**

Detailed information on the services offered is available on our website at:

http://www.siemens.com/automation/service&support

Service & Support à la Card: Some examples

Technical Support	
"Priority"	High priority support in cases of emergency
"24 h"	Accessibility round the clock
"Extended"	Technical advice on complex queries
Support Tools in the Support Shop	
"System Utilities"	directly usable tools for design, analysis and checking
"Applications"	complete theme solutions, including pretested software
"Functions & Samples"	adaptable modules to accelerate your developments

A&D/MZ_1/De 31.08.06

Notes

Notes

Conditions of sale and delivery
Export regulations

Conditions of sale and delivery

You can obtain the products described in this catalog (hardware and software) from Siemens AG in accordance with the following conditions. Please note the scope, quality and conditions of sale and delivery, including software supplied by Siemens departments and regional companies based outside Germany, are governed solely by the valid general terms and conditions of delivery of the respective Siemens department or regional companies based outside Germany. The terms and conditions outlined below are valid exclusively for orders placed with the Siemens Aktiengesellschaft.

For customers based in Germany

The general terms and conditions of payment and general terms and conditions of delivery for goods and services in the electrical industry.

Software products are subject to the general terms and conditions for the lease of software for automation and drive systems to licensees based in Germany.

For customers based outside Germany

Siemens Automation and Drives' general terms and conditions of payment and general terms and conditions of delivery for customers based outside Germany apply.

Software products are subject to the general terms and conditions for the lease of software for automation and drive systems to licensees based outside Germany.

General information

Dimensions are given in mm. Data in inches apply in Germany only for export in accordance with the German Units of Measurement Act.

Illustrations are non-binding.

We reserve the right to make changes, in particular to the specified values, dimensions and weights, unless specified otherwise on the individual pages of this catalog.

Prices are listed in € (euro) ex delivery point, excluding packaging.

Sales tax (Value Added Tax) is not included in the prices. It will be charged in accordance with legal requirements at the applicable rate.

We reserve the right to adjust prices and shall charge the prices applying on the date of delivery.

Additional charges may be made for products which contain silver, copper, aluminum, lead and/or gold if the basic price quotations for these metals are exceeded. The additional charges will be determined according to quoted prices and the metal factor of the product.

The additional charge will be calculated on the basis of the price quoted the day before receipt of the order or call-off.
The metal factor indicates from which price quotation and by which method the additional metal prices are calculated. Where relevant, the metal factor is quoted when stating the prices of the respective products. You will find a detailed explanation of the metal factor on the page headed "Additional metal prices".

The Conditions of Sale for Siemens AG can be obtained free of charge from your Siemens representative using the Order No.:

- 6ZB5 310-0KR30-0BA1
  "Terms and Conditions of Business for Customers Based in the Federal Republic of Germany"
- 6ZB5 310-0KS53-0BA1
  "Terms and Conditions of Business for Customers Based outside the Federal Republic of Germany"

Request

downloaded from the A&D Mall at
http://www.siemens.de/automation/mall
(Germany: A&D Mall Online Help System)

Export regulations

The products listed in this catalog may be subject to European/German and/or US export regulations.

Any export requiring approval is therefore subject to authorization by the relevant authorities.

For the products listed in this catalog, the following export regulations are currently valid:

AL	Number of the German export list Products with a code other than "N" must be approved for export. The export codes of the respective data medium must also be adhered to for software products. Goods labeled with "AL" not equal to "N" are subject to European or German export authorization when being exported out of the EU.
ECCN	Number of the US export list (Export Control Classification Number). Products with codes other than "N" require approval for re-export to certain countries. The export codes of the respective data medium must also be adhered to for software products. Goods labeled with "ECCN" not equal to "N" are subject to US re-export authorization.

Even without a mark or with mark "AL: N" or "ECCN: N" approval may be required because of, amongst other things, the final destination and use of the goods.

The AL and ECCN export codes specified in our confirmations, delivery notes and invoices apply.

Errors excepted and subject to change without prior notice.

A&D/VuL_without MZ/De 04.09.06

Catalogs

Industry Automation, Motion Control and Electrical Installation Technology

Please send any requests to your Siemens representative Addresses can be found in the Catalog or at www.siemens.de/automation/partner

Automation and Drives

	Catalog
Interactive catalog on CD-ROM and DVD Automation and Drives' Offline Mall	CA 01

Drive Systems

Variable-Speed Drives	
SINAMICS G110/SINAMICS G120 Inverter Chassis Units	D 11.1
SINAMICS G120D Distributed Frequency Inverters	
SINAMICS G130 Drive Converter Chassis Units, SINAMICS G150 Drive Converter Cabinet Units	D 11
SINAMICS GM150/SINAMICS SM150 Medium-Voltage Converters	D 12
SINAMICS S150 Drive Converter Cabinet Units	D 21.3
Three-Phase Asynchronous Motors Standardline	D 86.1
Three-Phase Synchronous Motors HT-direct	D 86.2
DC Motors	DA 12
SIMOREG Chassis Converters	DA 21
SIMOREG Converter Cabinet Units	DA 22
PDF: SIMOVERT PM Modular Converter System	*DA 45.1*
SIEMOSYN Synchronous Motors	DA 48
MICROMASTER 420/430/440	DA 51.2
MICROMASTER 411/COMBIMASTER 411	DA 51.3
PDF: MICROMASTER, MIDIMASTER DC Link Inverters	*DA 64*
SIMOVERT MASTERDRIVES Vector Control	DA 65.10
SIMOVERT MASTERDRIVES Motion Control	DA 65.11
Servo Motors for SIMOVERT MASTERDRIVES	DA 65.3
SIMODRIVE 611 universal and POSMO	DA 65.4
SIVOLT AC and DC Power Controllers	DA 68
Low-Voltage Three-Phase Motors	
IEC Squirrel-Cage Motors	D 81.1
IEC Squirrel-Cage Motors · New generation 1LE1	D 81.1 N
MOTOX Geared Motors	D 87.1
Drive Systems for SIMODRIVE Machine Tools • Feed/Main Spindle Motors • SIMODRIVE 611/POSMO Converter System	NC 60
Drive Systems for SINAMICS Machine Tools • Feed/Main Spindle Motors • SINAMICS S120 Drive System	NC 61
Drive and Control Components for Hoisting Gear	HE 1
Mechanical Driving Machines	
Flender Standard Couplings	MD 10.1

Automation Systems for Machine Tools

SINUMERIK & SIMODRIVE Complete Catalog	NC 60
SINUMERIK & SINAMICS Complete Catalog	NC 61

SIMATIC HMI — ST 80

SIPOS Electric Actuators

Electric Rotary, Linear and Part-Turn Actuators	MP 35
Electric Rotary Actuators for Nuclear Plants	MP 35.1/.2

Industrial Communication for Automation and Drives — IK PI

SIMATIC Industrial Automation Systems

	Catalog
SIMATIC PCS Process Control System	ST 45
Components for Totally Integrated Automation and Micro Automation	ST 70
SIMATIC PCS 7 Process Control System	ST PCS 7
Add-Ons for SIMATIC PCS 7 Process Control System	ST PCS 7.1
Migration Solutions with the SIMATIC PCS 7 Process Control System	ST PCS 7.2
PC-based Automation	ST PC
SIMATIC Control Systems	ST DA

Electrical Installation Technology

PDF: ALPHA Distribution Boards and Terminal Blocks	*ET A1*
ALPHA Meter Cabinets	ET A2
BETA Low-Voltage Switchgear and Control Gear	ET B1
GAMMA Building Management Systems	ET G1
DELTA Switches and Outlets	ET D1

Motion Control Systems

SIMOTION, SINAMICS S120 and Motors for Production Machines	PM 21

Low Voltage Controls and Distribution

SIRIUS · SENTRON · SIVACON	LV 1
SICUBE System Cabinets and Cabinet Heating/Air-Con-	LV 50
SIDAC Reactors and Filters	LV 60
SIVENT Fans	LV 65
SIVACON 8PS Busbar Trunking Systems	LV 70

TELEPERM M Process Control System

PDF: AS 488/TM Automation Systems	*PLT 112*

Process Instrumentation and Analytics

Field Instruments for Process Automation Measuring Instruments for Pressure, Differential Pressure, Flow, Level and Temperature, Positioners, and	FI 01
PDF: Indicators for Panel Mounting	*MP 12*
SIREC Recorders and Accessories	MP 20
SIPART, Controllers and Software	MP 31
SIWAREX Weighing Systems	WT 01
Continuous Weighing and Process Monitoring	WT 02
Process Analysis Devices	PA 01
PDF: Process Analysis, Components for System Integration	*PA 11*

SIMATIC Sensors

Sensors for Factory Automation	FS 10

SITRAIN Information and Training — ITC

System Solutions for Industry

Applications and Products for Industry are part of the interactive catalog CA 01

Systems Engineering

Power Supplies SITOP and LOGO!Power	KT 10.1
SIMATIC TOP connect System Cabling	KT 10.2
SICOMP Industrial Microcomputers	KT 51

PDF: These catalogs are available in PDF format only.

Siemens AG
Industry Sector
Industry Automation
Systems Engineering
Postfach 23 55
90713 FÜRTH
GERMANY

www.siemens.com/sitop

Subject to change without prior note
Order No. E86060-K2410-A101-A6-7600
Dispo 10001
KG 0708 15. BD 140 EN / 822202
Printed in Germany