DO NOT SCALE

DIMENSIONS IN mm

METRIC

THIRD ANGLE PROJECTION

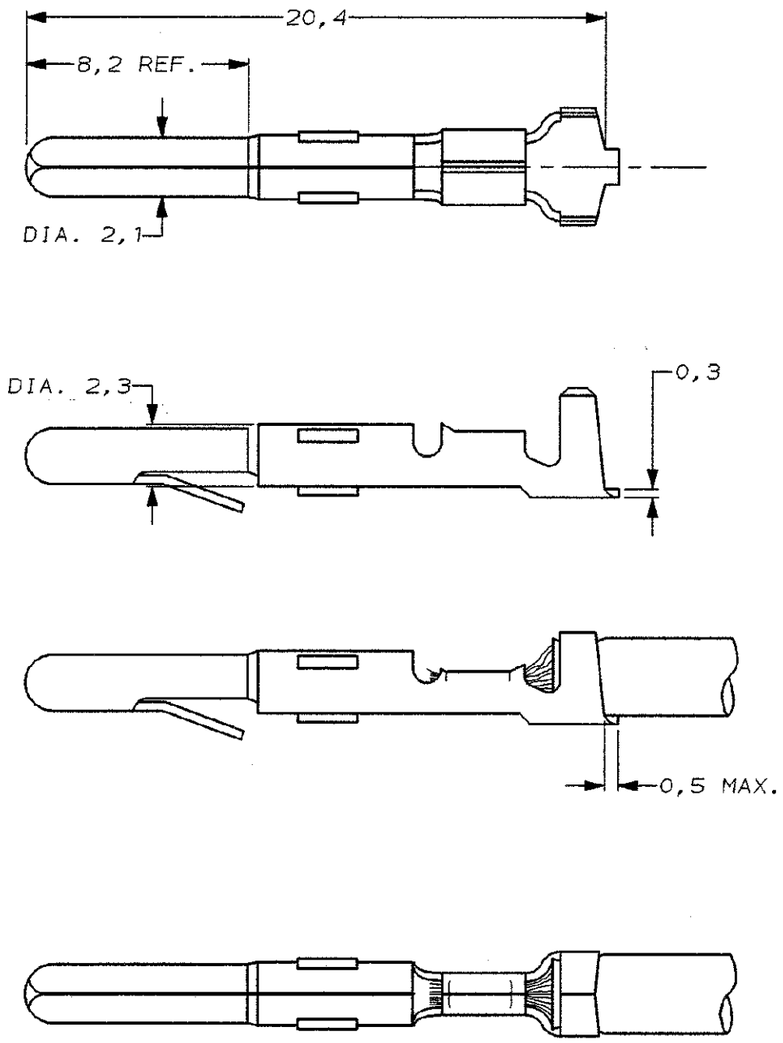

WIRE RANGE : 0,5-1,0mm

INSULATION RANGE : 1,8-3,3 DIA.

	-	-	-
		-	-
	-	-	-
	-	-	-
	-	-	-
	-	-	-
	-	-	-
	-	-	-
	PRE-TINPLATED	PHOSPHOR BR.	163305-4
	UNPLATED	PHOSPHOR BR.	163305-3
	PRE-TINPLATED	BRASS	163305-2
	UNPLATED	BRASS	163305-1
-	PLATING	MATERIAL	PARTNUMBER

LTR.	REVISION RECORD	DR.	CHK.	DATE
-	-	-	-	-
-	-	-	-	-
-	-	-	-	-
-	-	-	-	-
-	-	-	-	-
-	-	-	-	-
-	-	-	-	-
C	EH-1221-96	JvL	AB	24-10-96

CUSTOMER DRAWING

FOR REFERENCE ONLY WILL NOT BE UPDATED

DR.: J.v.LIEMPT	CHK.: A.BIJNEN.	APP.: M.v.DRIEL	DWG.No. C-163305		REV.LTR. C	SHEET 1 OF 1	A3
DATE: 24 OCT 96	DATE: -	DATE: -					

R6-210 (REV.04-91)

8 7 6 5 4 3 2 1

F E D C B A