SPECIFICATIONS
Current Rating: 7A AC,DC
Voltage Rating: 250V AC,DC
Temperature Range: −25°C ~ +85°C
Contact Resistance: 10mΩ Max
Insulation Resistance: 1000MΩ Min
Withstanding Voltage: 1500V AC/minute
Material: Nylon 66,UL94V−2
Color: Natural(Translucent)

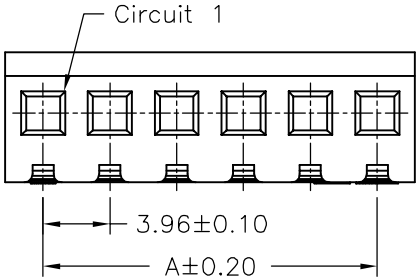

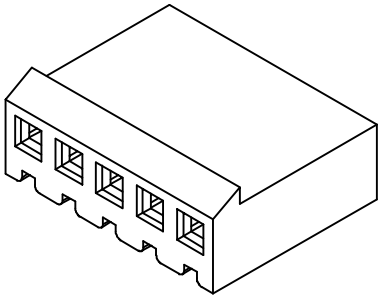

Ordering Information:
A3960H−XP−*
1 2
1.Part No.
2.Style:
1−Type 1
2−Type 2

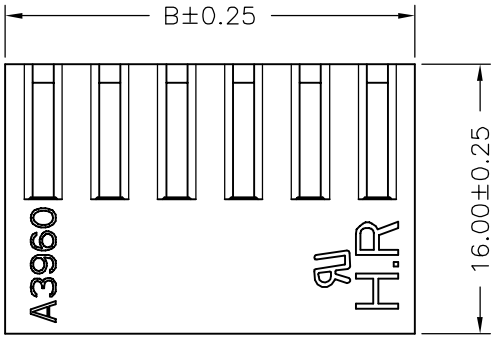

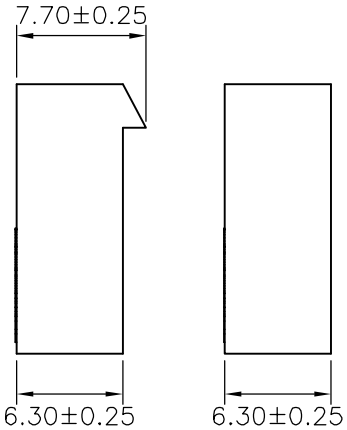

TYPE 1 TYPE 2

Ordering Information & Dimensions

PART NO.	Dimensions	
	A	B
A3960H−02P	3.96	8.43
A3960H−03P	7.92	12.39
A3960H−04P	11.88	16.35
A3960H−05P	15.84	20.31
A3960H−06P	19.80	24.27
A3960H−07P	23.76	28.23
A3960H−08P	27.72	32.19
A3960H−09P	31.68	36.15
A3960H−10P	35.64	40.11
A3960H−11P	39.60	44.07
A3960H−12P	43.56	48.03
A3960H−13P	47.52	51.99
A3960H−14P	51.48	55.95
A3960H−15P	55.44	59.91
A3960H−16P	59.40	63.87
A3960H−17P	63.36	67.83
A3960H−18P	67.32	71.79
A3960H−19P	71.28	75.75
A3960H−20P	75.24	79.71

REV.	DESCRIPTION	DATE
B1	REVISE	2006.10.31
B0	NEW RELEASE	2006.05.29

JOINT TECH ELECTRONIC IND. CO., LTD.
JOY DAY INDUSTRIAL CO., LTD.

UNIT	SCALE	SHEET
mm		1 of 1

DRAWN BY	APPROVED BY
董正一 2001.02.01	董正一 2001.02.01

GENERAL TOLERANCE
X.X±0.25
X.XX±0.15
X.XXX±0.05
ANGLE±

TITLE:
3.96mm PITCH HOUSING

DRAW NO.: A3960H-XP-X
REV. B1