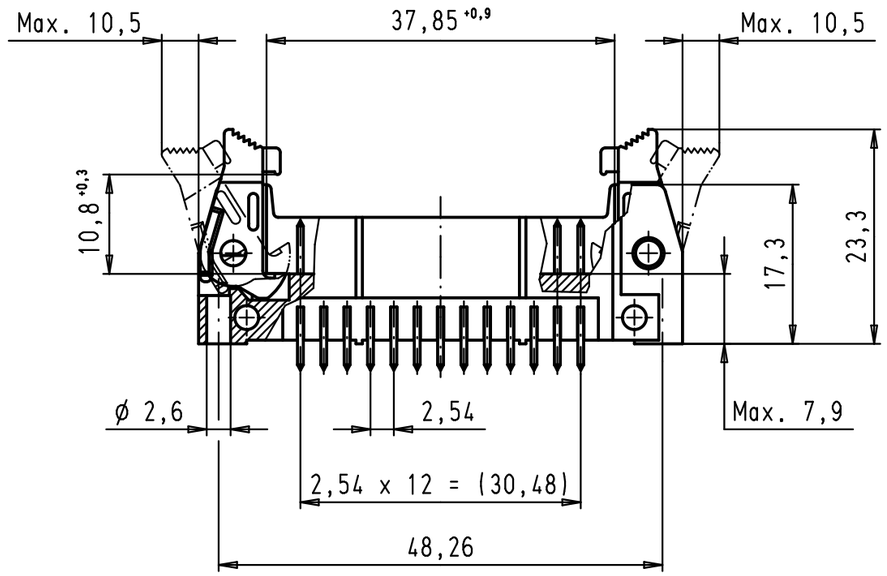

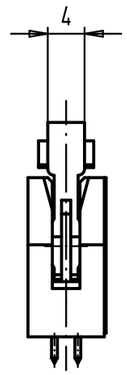

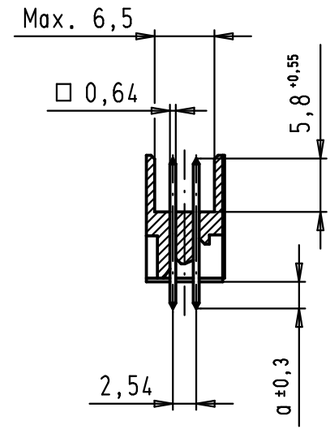

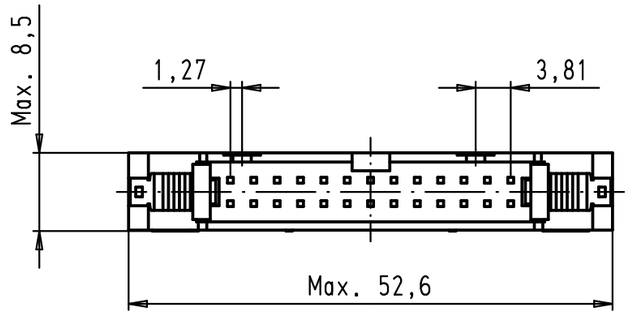

PCB layout, component side

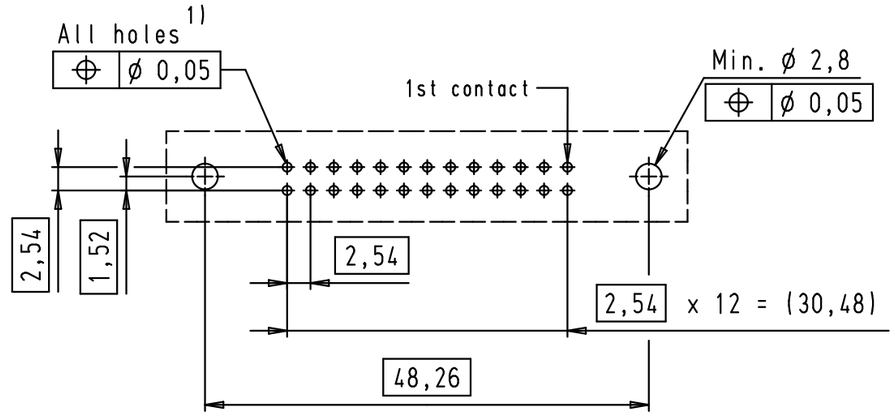

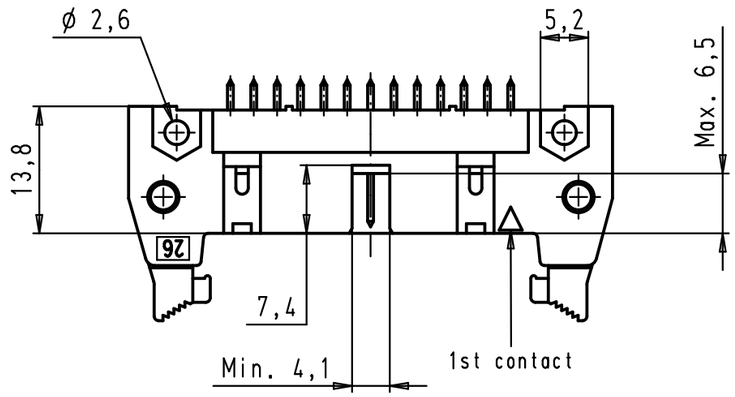

1) Solder pins for PCB connections ø1±0,1 according to IEC 60 326-3

09 18 526 7912	3	4,5
09 18 526 6912	2	4,5
09 18 526 5912	0,76 µm Au	4,5
09 18 526 7914	3	2,9
09 18 526 6914	2	2,9
09 18 526 5914	0,76 µm Au	2,9
Part number	Performance level	a

Mod.	Dat.	Name
34900	29/01/08	LP
27931	15/06/00	JB
26554	01/12/99	JB

	Dat.	Name
Detail.	01/12/99	JB
Insp.		
Stand.		

All Dim. in mm
Orig. Size DIN A 3

HARTING EURL
F-95972 Paris

SEK 18 Male Connector Standard
26 poles
Straight solder pins
Short locking levers

Maßstab/Scale: 1,5:1

TB 09 18 526 X91X

Sub.

Blatt/Page 1/2

Alle Rechte vorbehalten/ All rights reserved