REVISIONS						
REV	ZONE	ECO	DESCRIPTION	DATE	BY	APPR
01	--	--	FELEASE NUMBER	15-JAN-10		

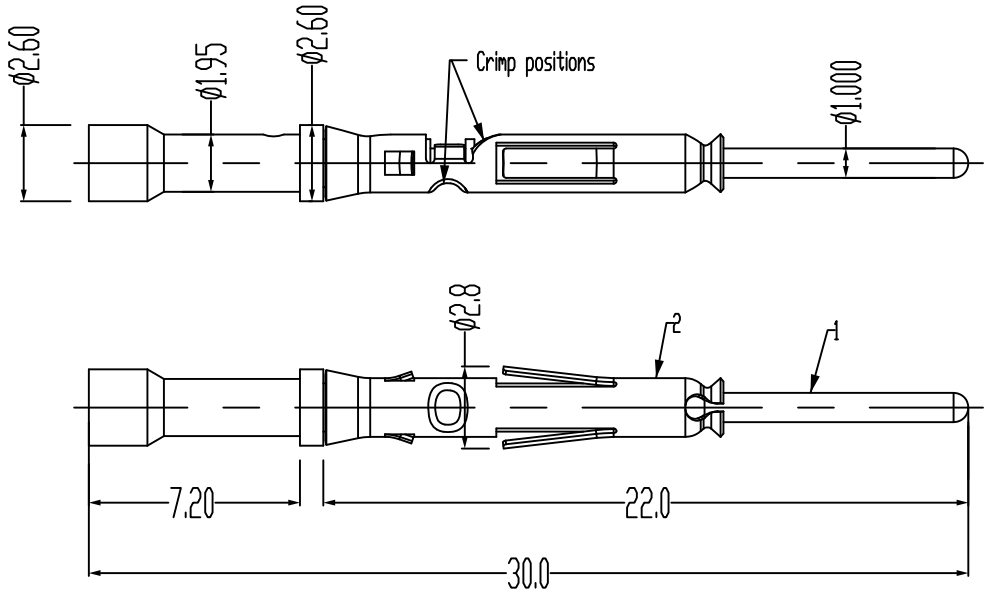

General specification:
1. Suitable pin diameter:1.0mm(Size 20)
2. Current rating:5A.
3. Termination type:crimp
4. Crimp wire range:20~22AWG
5. Cable Strip Length:7mm
6. Plating Specification:
   6.1. When XX=F Contact Plate Gold flash.
   6.2. WhenXX=G15 Contact Plate Gold 15u".
   6.3. WhenXX=G30 Contact Plate Gold 30u".
7. Material Specification:See Below
   7.1. Contact Body:Brass.
   7.2. Metal Spring Clip:Stainless steel

MATERIALS LIST

UNLESS OTHERWISE SPECIFIED
1) All dimensions are in metric(mm).
2) Tolerances are as follows:
1 PL DEC ±0.30
2 PL DEC ±0.15 Fractions ±1/64
3 PL DEC ±0.10 Angles ±1°

	SIGNATURE		DATE
DRAWN	TOM		10-JAN-10
CHECKED	POTER		15-JAN-10
ENGINEER			
APPROVAL	FOUNT		15-JAN-10
CUSTOMER	CUSTOMER		

MATERIAL SPECIFICATIONS:
material

PROCESS SPECIFICATIONS:

THIS DRAWING IS SUPPLIED FOR INFORMATION ONLY. DESIGN FEATURES, SPECIFICATIONS AND PERFORMANCE DATA SHOWN HEREON ARE THE PROPERTY OF THE AMPHENOL CORPORATION. NO RIGHTS OF REPRODUCTION ARE IMPLIED. ALL DIMENSIONS ARE SUBJECT TO NORMAL MANUFACTURING VARIATIONS.

SINE Systems Corporation
A Subsidiary of Amphenol Corporation

PIN CONTACT,STAMPED,CRIMP 20-22AWG,SIZE 20

DWG NO: MP20W23XX

THIRD ANGLE PROJECTION	FSCM NO.	SIZE	MASS	REV.	SCALE
		A4		01	1:1

SHEET 1 OF 1

NEXT ASS'Y: