MOLEX SAP P/N	ENGINEERING P/N
1300350085	DNETAUXPT

* CENELEC EN 50 044 PINOUT SHOWN
(SAE-J-1738A SHOWN IN PARENTHESIS)

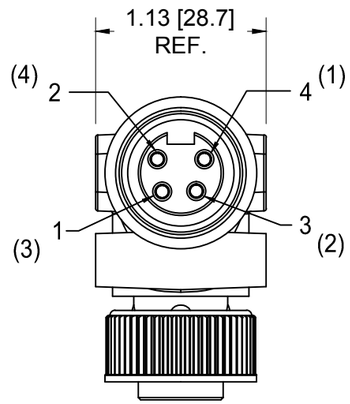

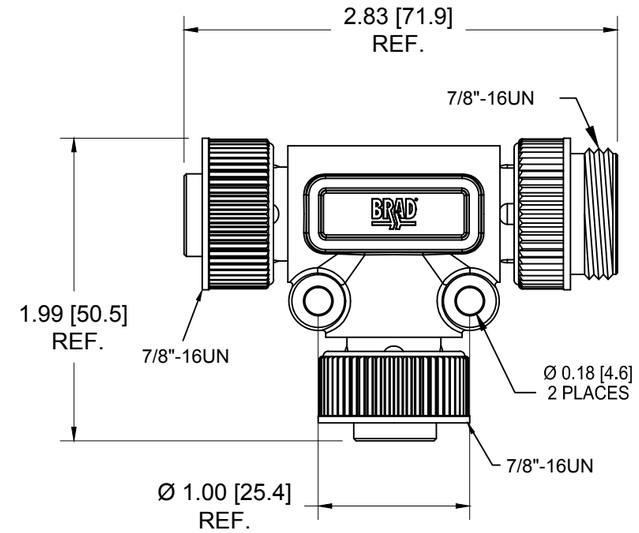

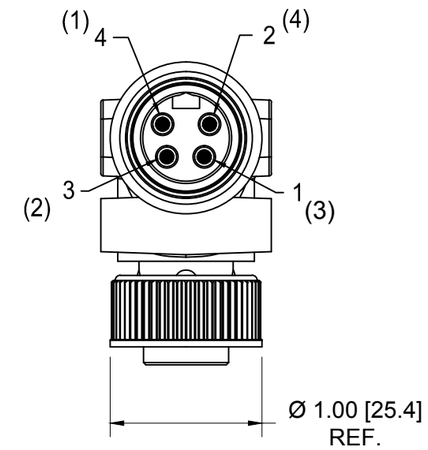

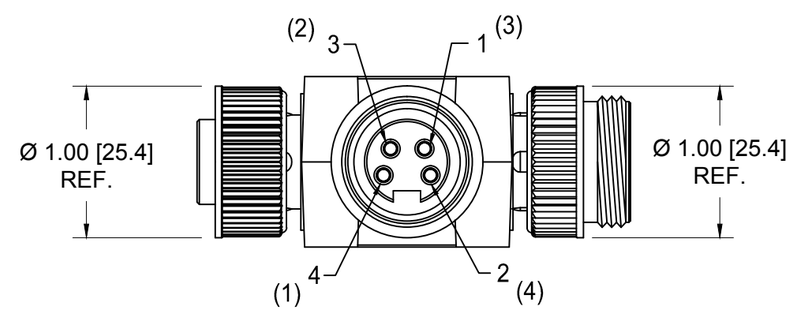

SCHEMATIC

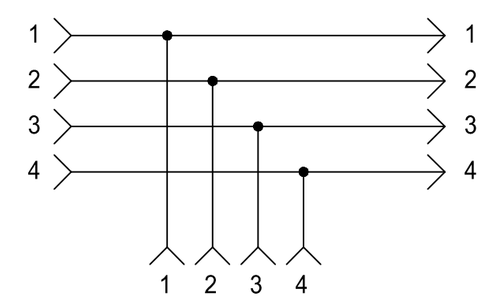

SPECIFICATIONS:

COUPLING NUT MATERIAL: ZINC DIECAST WITH BLACK ELECTROPHORETIC COATING
CONTACT MATERIAL: GOLD/NICKEL OVER COPPER ALLOY
INSERT MATERIAL: YELLOW TPE
OVERMOLD MATERIAL: YELLOW TPE

ASSEMBLY RATING: 600V, 10A

ENVIRONMENTAL: −20°C TO 80°C
IP67 WHEN MATED

AGENCY APPROVALS: UL LISTED

REV	DESCRIPTION
A	RELEASE EC NO: IPG2012-1061 2012/06/26 DRWN: VOU CH'KD: KJOZWIK APPR: JFMURPHY 2012/07/05

QUALITY SYMBOLS
▼=0
(C)=0

GENERAL TOLERANCES (UNLESS SPECIFIED)	mm	INCH
4 PLACES	±---	±---
3 PLACES	±---	±.005
2 PLACES	±0.13	±.010
1 PLACE	±0.25	±.020
ANGULAR ±.5°		

DRAFT WHERE APPLICABLE MUST REMAIN WITHIN DIMENSIONS

DIMENSION STYLE: INCH/MM	SCALE: 1:1	DESIGN UNITS: INCH	THIRD ANGLE PROJECTION
DRAWN BY: VOU	DATE: 2012/06/26	TITLE: MINI-CHANGE 4-POLE TEE ---- ----	
CHECKED BY: KJOZWIK	DATE: 2012/06/31		
APPROVED BY: JFMURPHY	DATE: 2012/07/05	molex MOLEX INCORPORATED	
MATERIAL NO.: SEE CHART		DOCUMENT NO.: SD-130035-014	SHEET NO.: 1 OF 1
SIZE: B			

THIS DRAWING CONTAINS INFORMATION THAT IS PROPRIETARY TO MOLEX INCORPORATED AND SHOULD NOT BE USED WITHOUT WRITTEN PERMISSION