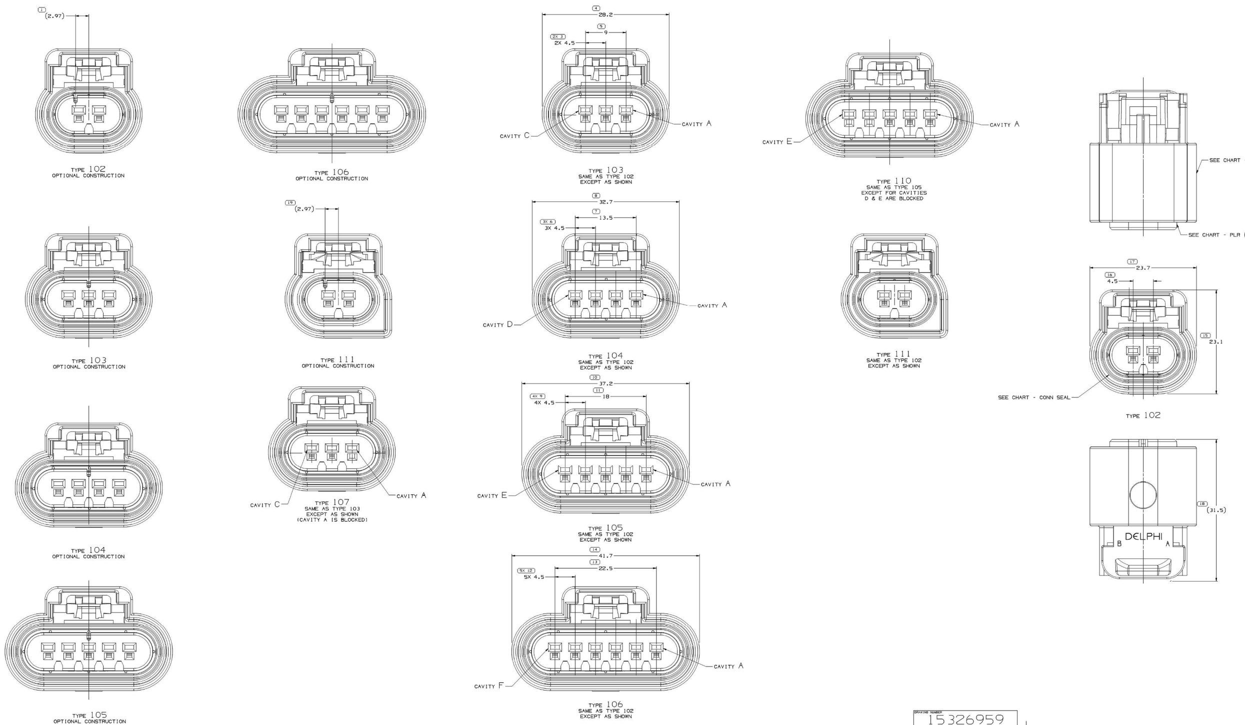

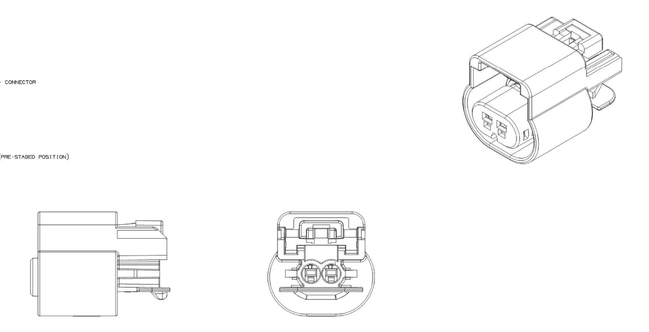

SYMBOL DEFINITION			MISSING SYMBOLS
A DIMENSION WITHOUT AN INSPECTION REPORT SYMBOL ( ) DOES NOT REQUIRE INSPECTION. IT MAY BE CONTROLLED ON THE INDIVIDUAL COMPONENT DRAWING.	TOTAL NO OF INSPECTIONS REQUIRED	28	2
	LAST NO. USED	19	

DATE	STG	REV	N/P	CHG	ZONE	REVISION HISTORY	AUTH	DR	APVD 1	APVD 2
12MR02	R	06	-	-		CLEARED REVISION COLUMN, ALL PARTS - REDRAWN TO NEW FORMAT, ADDED TPA COLUMN	222112	LMB	LMB	CD
29JA04	R	07	-	-		15485649 RELEASED ALL PARTS REVISED NOTE 3	249215	BRB	BRB	LN
29JA04	R	08	-	-		15487756 RELEASED ALL PART - ADDED CPA COLUMN TO CHART 15326801,15326808,15326815,15326822, 15326829, AND 15397577 UPDATED ASM	250452	BRB	BRB	LN
10AU04	R	09	-	-		ALL PARTS - ADDED CAVITY PLUG NOTE; ADDED PART 13510085	257917	RH	RH	LN
01DE04	R	10	-	-		15326801 - UPDATED PDM ATTRIBUTES	261604	HAM	HAM	MJC
04JA05	R	11	-	-		13519047, 13519051 - RELEASED	262679	ADK	ADK	LN
15FE05	R	12	-	-		13521746 WAS PE141905 & RELEASED	264248	JPB	FKV	JGS
20MY05	R	13	-	-		15397577 - TPA 15317363 WAS 15418545	268256	RJD	RJD	LN
25MY05	R	14	-	-		13521746 - OBSOLETE	268146	JBD	FRG	JGS
29JN05	R	15	-	-		RELEASED 13533784	269268	JEB	JEB	LN
18OC05	R	16	-	-		ALL PARTS - ADDED "CONN COLOR" COLUMN TO CHART AND "MATING" TO TPA AND CPA; 15397577, 15487756, 13510085, 13519049 & 13519051 - ADDED ANOTHER MATING CONN; 15326801, 15326808, 15326815 & 15326829 - CHANGED STATUS TO RESTRICTED AND ADDED "REPLACED BY" PART NUMBER; 15326829 & 15397577 - REVISED GRAPHICS TO SHOW ORIGINAL CONSTRUCTION OF CONNECTOR; 15374222 & 15374223 MOVED TO TAXI 13544923; 13546696 - RELEASED	273303	CJP	CJP	LN
23NO05	R	17	-	-		RELEASED 13542790	274390	CJP	CJP	MD
13FE06	R	18	-	-		UPDATED PDM ATTRIBUTES	277479	TS	TS	SM
17AP06	R	19	-	-		13510085 - UPDATED PDM ATTRIBUTES	279594	JBD	AUG	SRM
04AP07	R	20	-	-		15326801, 15326808, 15326815, 15326822, 15326829 & 13542790 - UPDATED PDM ATTRIBUTES	401048	ACG	JAA	PYP
28MY07	R	21	-	-		15326822 - RESTRICTED AND REPLACED BY 13519051	401493	MDH	JAA	GGI
07AP09	R	22	-	-		ALL ACTIVE PARTS - ADDED APLICATION DATA & APPEARANCE ITEM NOTES; REMOVED MATING COMPONENTS & PART ACCEPTS NOTES, MAT'L RECYCLING CODE FROM CONN, MAT'L RECYCLING CODE LABEL; REVISED CHART INFO; 13521746 - UPDATED REV LEVEL	407614	JOA	FKV	RAP
18JL09	R	23	-	-		15326801 - CONNECTOR WAS 15326800; 15326808 - CONNECTOR WAS 15326807; 15326815 - CONNECTOR WAS 15326814; 15326822 - CONNECTOR WAS 15326821; 15326829 - CONNECTOR WAS 15326828; ALL PARTS ACTIVE - REVISED GRAPHICS	408214	TBR	GLG	RAP
17AU09	R	24	-	-		15326801 - CONNECTOR WAS 13510084; 15326808 - CONNECTOR WAS 13519046; 15326815 - CONNECTOR WAS 15487758; 15326822 - CONNECTOR WAS 13519050; 15326829 - CONNECTOR WAS 15397575	408656	FRE	FRG	RAP
28AU09	R	25	-	-		ALL ACTIVE PARTS - PSD WAS 13	408754	MAL	JAA	GEM
29OC09	R	26	-	-		15326801, 15326808, 15326815, 15326822 & 15326829 - WERE RESTRICTED USAGE AND REMOVED REPLACED PART NUMBER	409353	JAR	JAA	VMR
10MR10	R	27	-	-		13806455 & 13806461 RELEASED	410201	MHS	MHS	MHS
10JN10	R	28	-	-		13824977 - RELEASED	411023	MAB	JAA	VMR
29OC10	R	29	-	-		13824977 - MOVED TO TAXI DRAWING 15326960 SHT 01	412392	AJP	JAA	VMR
28JN11	R	30	-	-		ALL ACTIVE PARTS - ADDED CONNECTION USCAR NOTE AND REMOVED CONN COLOR, REPLACED BY & USAGE COLUMNS FROM CHART	414646	AHY	JAA	DGL
24NO11	R	31	-	-		13916486- RELEASED	415234	JRV	TBR	JRV
15NO12	R	32	-	-		ALL PARTS: ADDED OPTIONAL CONSTRUCTION	420471	MHS	MHS	MHS
09JA14	R	33	-	-		33132232 - RELEASED	424770	GLG	GLG	JFF
04FE15	R	34	-	-		33179417 - RELEASED	428700	JSM	ERG	JSM

NOTES

1. UNLESS OTHERWISE SPECIFIED AND/OR INDICATED:

   DIMENSIONS ARE TO FACE OF VIEW SHOWN AND AUTOMATICALLY ROUNDED BY COMPUTER FOR INSPECTION (SEE MATH MODEL FOR PRECISE DIMENSIONS). FOR ALL OTHER DIMENSIONS NOT SHOWN BUT REQUIRED FOR TOOL BUILD, SEE MATH MODEL FOR PRECISE TOOL PATH DATA.

2. THIS PRODUCT IS NOT CATEGORIZED AS AN APPEARANCE ITEM, MINOR IMPERFECTIONS INCLUDING, BUT NOT LIMITED TO, FLOW MARKS, COLOR BLEMISHES, GATE VESTIGE, AND SOFT FLASH THAT DO NOT AFFECT THE FIT, FORM, OR FUNCTION OF THE PART ARE PERMISSIBLE PER DPNP-4.7-CS-01.

3. FOR APPLICATION DATA SEE THE INDIVIDUAL APPLICATION DRAWINGS.

4. THIS CONNECTION MEETS OR EXCEEDS SAE/USCAR-2 AUGUST 1997, SECTION 5.3.1.2, TERMINAL DISENGAGE CRITERIA WITH THE APPLICATION OF A TERMINAL POSITION ASSURANCE (TPA) SECONDARY LOCK.

PART NO	ID	REV	N/P	TYPE	CONNECTOR	PLR	CONNECTOR SEAL
33179417	-	01	-	105	33179415	15326824 / ID404319	15326825 / ID404285
33132232	-	01	-	107	33132231	15326810/ID404322	15326811/ID404283
13916486	-	01	AA	106	13915282	15326937	15326831
13806455	-	01	AB	102	13806430	15326803 / ID404323	15326804 / ID404282
13806461	-	01	AB	104	13806431	15326817 / ID404321	15326818 / ID404284
13542790	-	01	AF	111	13542789	15326803 / ID404323	15326804 / ID404282
13546696	-	01	AE	102	13546695	15326803 / ID404323	15326804 / ID404282
13533784	-	01	AF	102	13534232	15326803 / ID404323	15326804 / ID404282
13521746	-	01	AB	110	13521741	15326824 / ID404319	15326825 / ID404285
13519051	-	01	AF	105	13519050	15326824 / ID404319	15326825 / ID404285
13519047	-	01	AF	103	13519046	15326810 / ID404322	15326811 / ID404283
13510085	-	01	AH	102	13510084	15326803 / ID404323	15326804 / ID404282
15487756	-	01	AG	104	15487758	15326817 / ID404321	15326818 / ID404284
15485649	-	01	AG	104	15485651	15326817 / ID404321	15326818 / ID404284
15397577	-	01	AK	106	15397575	15326937 / ID404318	15326831 / ID404286
15326829	ID404613	03	AN	106	15326828 / ID404329	15326937 / ID404318	15326831 / ID404286
15326822	ID404612	03	AP	105	15326821 / ID404330	15326824 / ID404319	15326825 / ID404285
15326815	ID404611	03	AN	104	15326814 / ID404331	15326817 / ID404321	15326818 / ID404284
15326808	ID404610	03	AN	103	15326807 / ID404332	15326810 / ID404322	15326811 / ID404283
15326801	ID404609	03	AP	102	15326800 / ID404333	15326803 / ID404323	15326804 / ID404282

A LINE DRAWN THROUGH A PART NUMBER INDICATES THAT PHYSICAL PARTS ARE NOT AVAILABLE FOR ORDERING.

PART NUMBERS THAT DO NOT HAVE A LINE PRESENT INDICATE THAT PHYSICAL PARTS ARE AVAILABLE FOR ORDERING.

CONTACT DELPHI SALES TO ASSURE AVAILABILITY OF PARTS.

DWG TYPE: PART DRAWING

STYLE:

VOLUME (CM³): | DISTR CODE: D

UNLESS OTHERWISE SPECIFIED

THIS DOCUMENT IS IN ACCORDANCE WITH ASME Y14.5M-1994 AS AMENDED BY THE GM GLOBAL DIMENSIONING AND TOLERANCING ADDENDUM - 1997. ALL GEOMETRIC TOLERANCES AND RELATED DATUMS APPLY RFS. RULE #1(PERFECT FORM AT MMC) DOES NOT APPLY WHEN RELATIONSHIP BETWEEN FEATURES IS ESTABLISHED BY ORIENTATION OR LOCATION TOLERANCES. SEPARATE POSITION CALLOUTS MAY BE GAGED SEPARATELY, REGARDLESS OF DATUM REFERENCE.

ALL DIMENSIONS ARE IN MILLIMETERS

(A) PROCESS SENSITIVE DIMENSION

REFERENCE:

THIRD ANGLE PROJECTION

DO NOT SCALE

USE MATH DATA

CAD NX

DELPHI

DELPHI PACKARD ELECTRICAL/ELECTRONIC ARCHITECTURE

WARREN, OH

COPYRIGHT 1997 DELPHI CORPORATION AND/OR ITS AFFILIATES. ALL RIGHTS RESERVED. REVISED 2015

THIS DRAWING IS THE PROPERTY OF DELPHI CORPORATION AND CONTAINS DELPHI CONFIDENTIAL INFORMATION. THE REPRODUCTION, DISTRIBUTION AND UTILIZATION OF THIS DOCUMENT OR ITS RELATED CAD MATH DATA, AS WELL AS COMMUNICATION OF ANY CONTENT TO OTHERS, WITHOUT EXPRESS AUTHORIZATION, IS PROHIBITED.

		DATE
DR		
APVD1	M. MCCALL	16JL97
APVD2	M. MCCALL	16JL97
APVD3	M. CHUPAK	25JL97
APVD4		
APVD5		

SUBSTANCES OF CONCERN AND RECYCLED CONTENT PER DELPHI 10949001

MATERIAL: SEE DRAWING

DRAWING NAME: TAXI ASM CONN F GT 150 SLD

DRAWING NUMBER: 15326959

SIZE	SCALE	FRAME NO	SHEET NO	STG	REV	N/P
A1x4	5:1	1 OF 2	1 OF 1	R	34	-

15326959