# 嘉尼企業股份有限公司CANAL ELECTRONIC CO.,LTD.

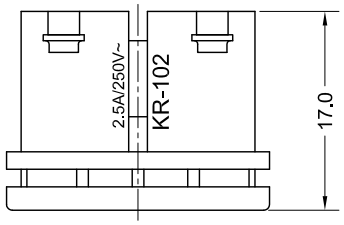


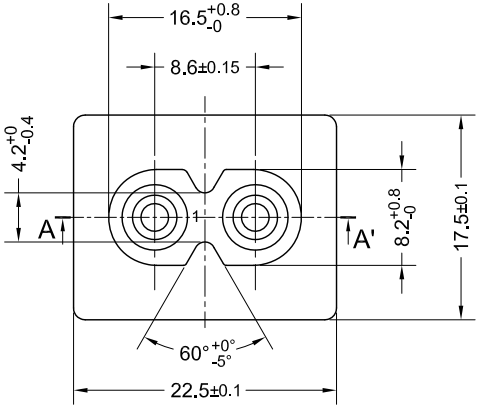


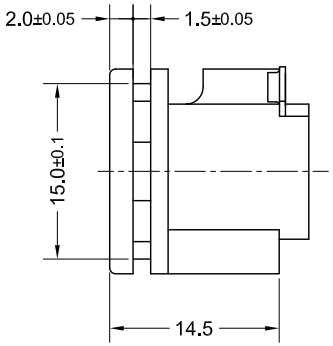


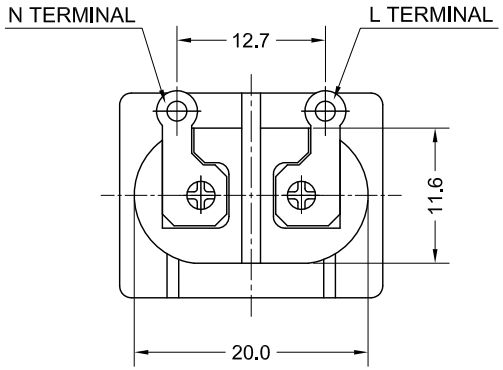


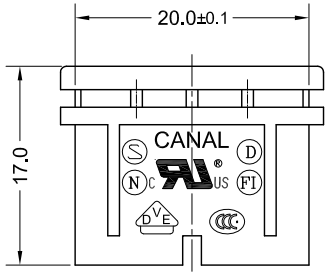


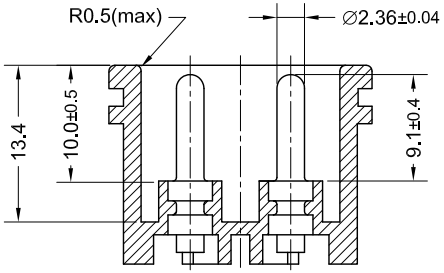


SECTION A-A'

SPECIFICATION MODEL:KR-102-6
RATING:2.5A 250VAC(UL/CUL/VDE/CCC)
INSULATION RESISTANCE:100Mohm.DC500V
DIELECTRIC STRENGTH:3000VAC FOR 1 MINUTE
MEET UL498& IEC/EN60320 REQUIREMENTS

NOTES:
1.BODY MATERIAL:,PBT+15%GF,UL 94V-0.
2.PIN TO PIN MUST WITHSTAHD 3KVAC IN 1 MINUTE MIN.
3.THE RIVET FORCE MUST WITHSTAND 20kg/1min.
4.THE RIVETED PIN'SRESISTANT MUST BE LOWER THAN 20m Ω.
5.TOLERANCES UNLESS OTHERWISE SPECIFIED:± 0.2mm

| REVISION | DESCRIPTION | REVISED BY | TOLEANCES .X .XX ANGLE ½° | | | | | UNIT mm | PART NAME | KR SPEC DRAWING | DWG NO |
|---|---|---|---|---|---|---|---|---|---|---|---|
| 4 | | | DRAWN BY | 劉華志 | DESIGNED BY | 馮紅崗 | SCALE | 3:2 | | | S0407B |
| 3 | | | | | | | | | | | |
| 2 2007.05.16 | 依最新總表更新品名，重新出圖； | 毛富強 | CHECKED BY | | APPROVED BY | | DATE | 2005.12.02 | PART NO | KR-102-6 | |
| 1 2005.12.02 | 增加刻字，重新出圖； | 劉華志 | | | | | | | | | |