DEGSON ELECTRONICS CO., LTD.

Product Specification

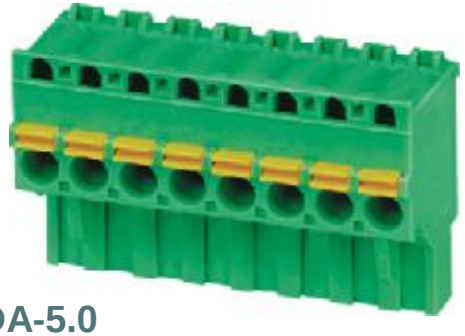

2EDGKDA-5.0
2EDGKDA-5.08

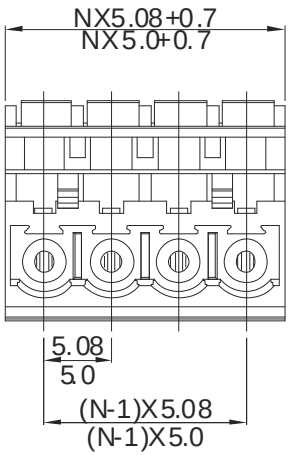

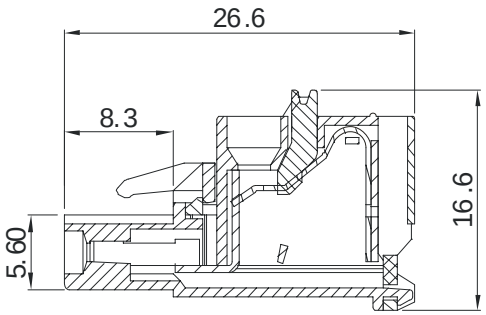

APPROVAL		
Electrical		
Standard	**UL**	**IEC**
Rated voltage	300V	320V
Rated current	10A	20A
Wire range	26-12AWG	2.5mm²
Withstanding voltage	AC2500V/1Min	
Mechanical		
Ambient temperature	-40℃~+105 ℃	
Strip length	10mm	
Dimensions		
Pitch	5.0mm(.197″) 5.08mm(.200″)	
Poles	2P-18P	
Material		
Housing	PA66,UL94 V-0	
Contact	Phosphor bronze	
Wire guard	Strainless steel	

HOW TO ORDER :

[ ] – [ ][ ] P — 1 [ ] — X X X (Customer Request)

- Series number
- No.of pole
- 1 Single pitch
- 2 Double pitch
- Color: 1 Grey, 2 Blue, 3 Black, 4 Green, 5 Orange, 6 Red, 7 Trans Parent, 8 Yellow, 9 White

mm (INCH)	DEGSON ELECTRONICS CO., LTD.
THIROANGLE PROJECTION	NAME 2EDGKDA-5.0 2EDGKDA-5.08

PDF 文件使用 "pdfFactory Pro" 试用版本创建 www.fineprint.cn