THIS DRAWING IS UNPUBLISHED. RELEASED FOR PUBLICATION -,- .
© COPYRIGHT - By - ALL RIGHTS RESERVED.

LOC	DIST
AA	00

REVISIONS

P	LTR	DESCRIPTION	DATE	DWN	APVD
	T	ECR-14-016571	4NOV2014	CW	SH

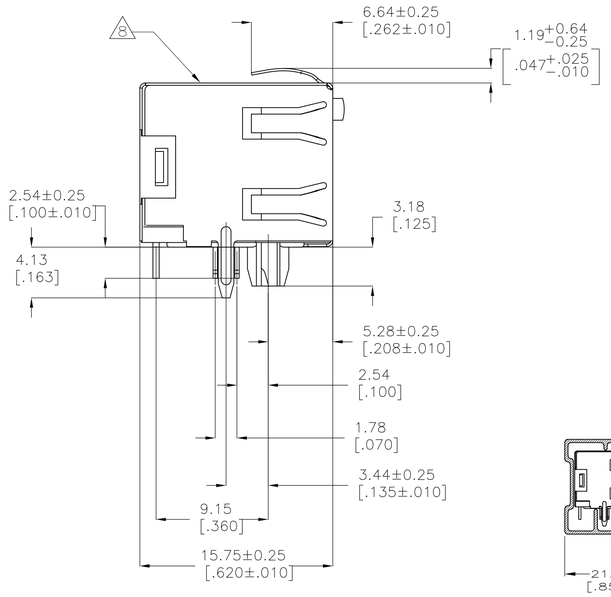

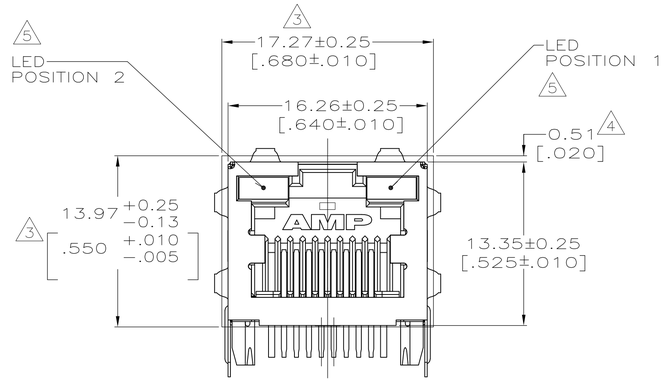

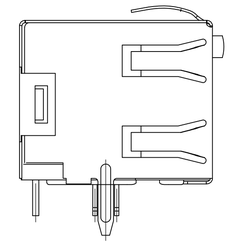

12 VIEW OF 3-406549-8

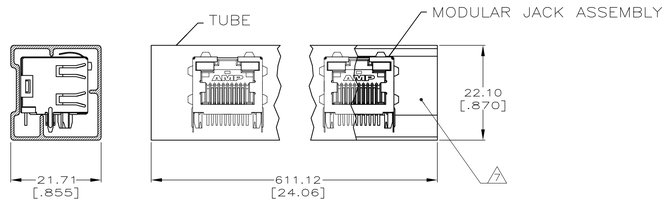

DETAIL A
TUBE PACKAGE
SCALE 2:1

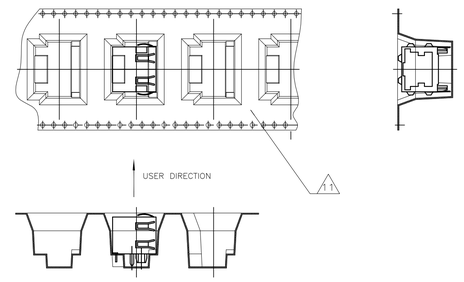

DETAIL B
TAPE REEL PACKAGE
SCALE 2:1

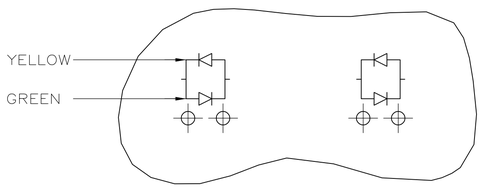

LED CURRENT DIAGRAM
406549-8, 2-406549-8

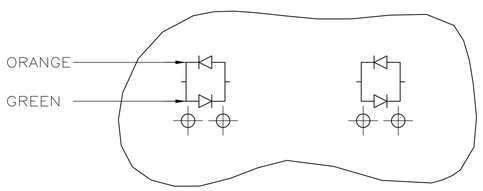

LED CURRENT DIAGRAM
2-406549-7 ONLY

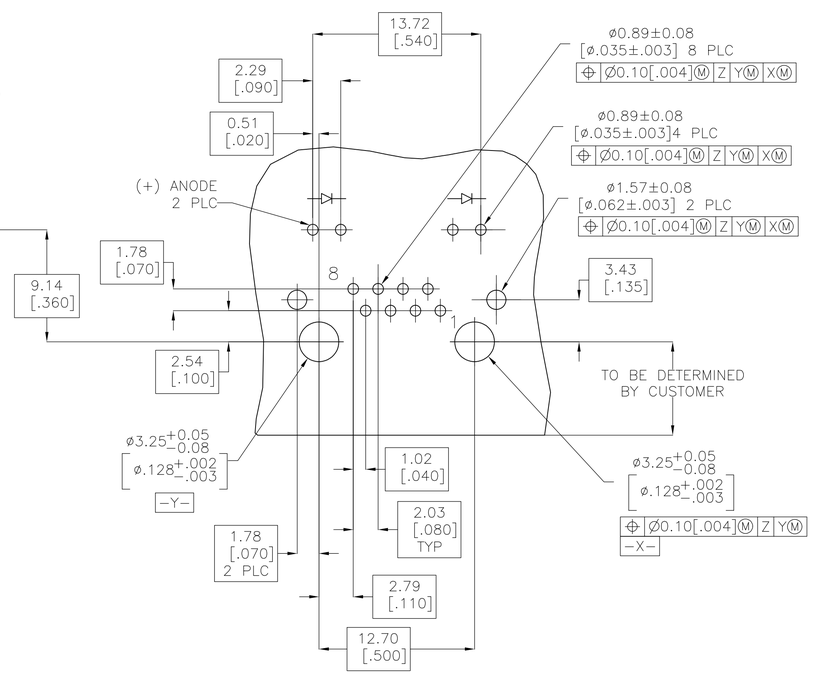

RECOMMENDED PRINTED CIRCUIT BOARD LAYOUT
(COMPONENT SIDE)

1 MATERIAL: HOUSING - HIGH TEMPERATURE THERMOPLASTIC, BLACK, UL94V-0.
TERMINALS - 0.36[.014] THICK PHOS BRONZE PLATED WITH 3.81μm[.000150] MINIMUM THICK (SEE P/N TABLE) IN SOLDER AREA. 1.27μm [.000050] MINIMUM GOLD IN LOCALIZED PLATE AREA. ENTIRE TERMINAL PLATED WITH 1.27μm [.000050] MINIMUM THICK NICKEL.
SHIELD - 0.196[.0077] THICK COPPER ZINC ALLOY PREPLATED WITH 1.27μm[.000050] MINIMUM SATIN NICKEL WITH 2.03μm[.000080] MINIMUM TIN POST DIPPED ON PCB GROUND TABS.
LIGHT EMITTING DIODE (LED) - DIFFUSED EPOXY LENS, 0.51 x 0.51[.020 x .020] CARBON STEEL WIREFRAME LEADS PLATED WITH 8.89μm[.000350] TIN/COPPER OVER 2.03[000080] SILVER OVER 1.02μm[.000040] NICKEL UNDERPLATE OVER 1.02μm[.000040] COPPER UNDERPLATE.

2. JACK CAVITY CONFORMS TO FCC RULES AND REGULATIONS PART 68, SUBPART F.

3 SUGGESTED PANEL OPENING DIMENSIONS.

4 SUGGESTED CLEARANCE BETWEEN TOP OF CONNECTOR AND TOP PANEL OPENING.

5 SEE TABLE FOR COLOR OF LEDS AND NUMBER REQUIRED.

6. THIS MODULAR JACK WITH INTEGRATED LED IS NOT IR REFLOW SOLDERING PROCESS COMPATIBLE.

7 PACKAGED 30 PIECES PER TUBE, SEE DETAIL "A".

8 MANUFACTURING DATE CODE:
LOCATED APPROX. AS SHOWN.
FIRST 2 DIGITS = LAST 2 DIGITS OF YEAR.
NEXT 2 DIGITS = MANUFACTURING WORK WEEK.
LAST DIGIT = DAY OF WEEK WITH SUNDAY = 1.

9 THE PART IS PRELIMINARY.

10 OBSOLETE PARTS: OBSOLETE CIS STREAMLINING PER D.RENAUD/D.SINISI

11 TAPE REEL PACKAGE ,SEE DETAIL B.

12 WITHOUT PLASTIC POST, SEE VIEW OF 3-406549-8.

13 REFLOW SOLDER PROCESS COMPATIBLE

	TERMINAL LEAD PLATING 1	PACKAGING	POSITION 2 INDICATOR COLOR	POSITION 1 INDICATOR COLOR	PART NUMBER
13	MATTE TIN	11 TAPE REEL	YELLOW/GREEN	YELLOW/GREEN	4-406549-8
	MATTE TIN	11 TAPE REEL	YELLOW/GREEN	YELLOW/GREEN	3-406549-8
	MATTE TIN	TRAY	-	GREEN/RED	3-406549-3
	MATTE TIN	TRAY	RED	GREEN	3-406549-2
	MATTE TIN	7 TUBE	YELLOW	GREEN	3-406549-1
	MATTE TIN	TRAY	ORANGE/GREEN	GREEN	3-406549-0
	MATTE TIN	TRAY	ORANGE/GREEN	YELLOW	2-406549-9
	MATTE TIN	TRAY	YELLOW/GREEN	YELLOW/GREEN	2-406549-8
	MATTE TIN	TRAY	ORANGE/GREEN	ORANGE/GREEN	2-406549-7
10 OBSOLETE	MATTE TIN	TRAY	YELLOW	YELLOW	~~2-406549-6~~
	MATTE TIN	TRAY	GREEN	GREEN	2-406549-5
	MATTE TIN	TRAY	GREEN	YELLOW	2-406549-4
10 OBSOLETE	MATTE TIN	TRAY	YELLOW	-	~~2-406549-3~~
	MATTE TIN	TRAY	-	GREEN	2-406549-2
	MATTE TIN	TRAY	YELLOW	GREEN	2-406549-1
	TIN-LEAD	TRAY	YELLOW/GREEN	YELLOW/GREEN	406549-8
10 OBSOLETE	TIN-LEAD	TRAY	YELLOW	YELLOW	~~406549-6~~
	TIN-LEAD	TRAY	GREEN	GREEN	406549-5
	TIN-LEAD	TRAY	GREEN	YELLOW	406549-4
10 OBSOLETE	TIN-LEAD	TRAY	YELLOW	-	~~406549-3~~
	TIN-LEAD	TRAY	-	GREEN	406549-2
	TIN-LEAD	TRAY	YELLOW	GREEN	406549-1

THIS DRAWING IS A CONTROLLED DOCUMENT.

DIMENSIONS: mm [INCHES]

TOLERANCES UNLESS OTHERWISE SPECIFIED:
0 PLC ± -
1 PLC ± -
2 PLC ± 0.25[.01]
3 PLC ± 0.13[.005]
4 PLC ± -
ANGLES ± -

MATERIAL: SEE NOTE 1
FINISH: SEE NOTE 1

DWN G. GARRETT 17-SEP-97
CHK G. GARRETT 17-SEP-97
APVD M. DERSTINE 17-SEP-97

PRODUCT SPEC 108-1163-4
APPLICATION SPEC 114-2154
WEIGHT -

CUSTOMER DRAWING

TE Connectivity

NAME: INVERTED MODULAR JACK ASSEMBLY, 1X1, SHIELDED, PANEL GROUND, LED -

SIZE	CAGE CODE	DRAWING NO	RESTRICTED TO
A1	00779	C-406549	-

SCALE 4:1 SHEET 1 OF 1 REV T

4805 (3/11)