Alle Rechte vorbehalten/ *All rights reserved*

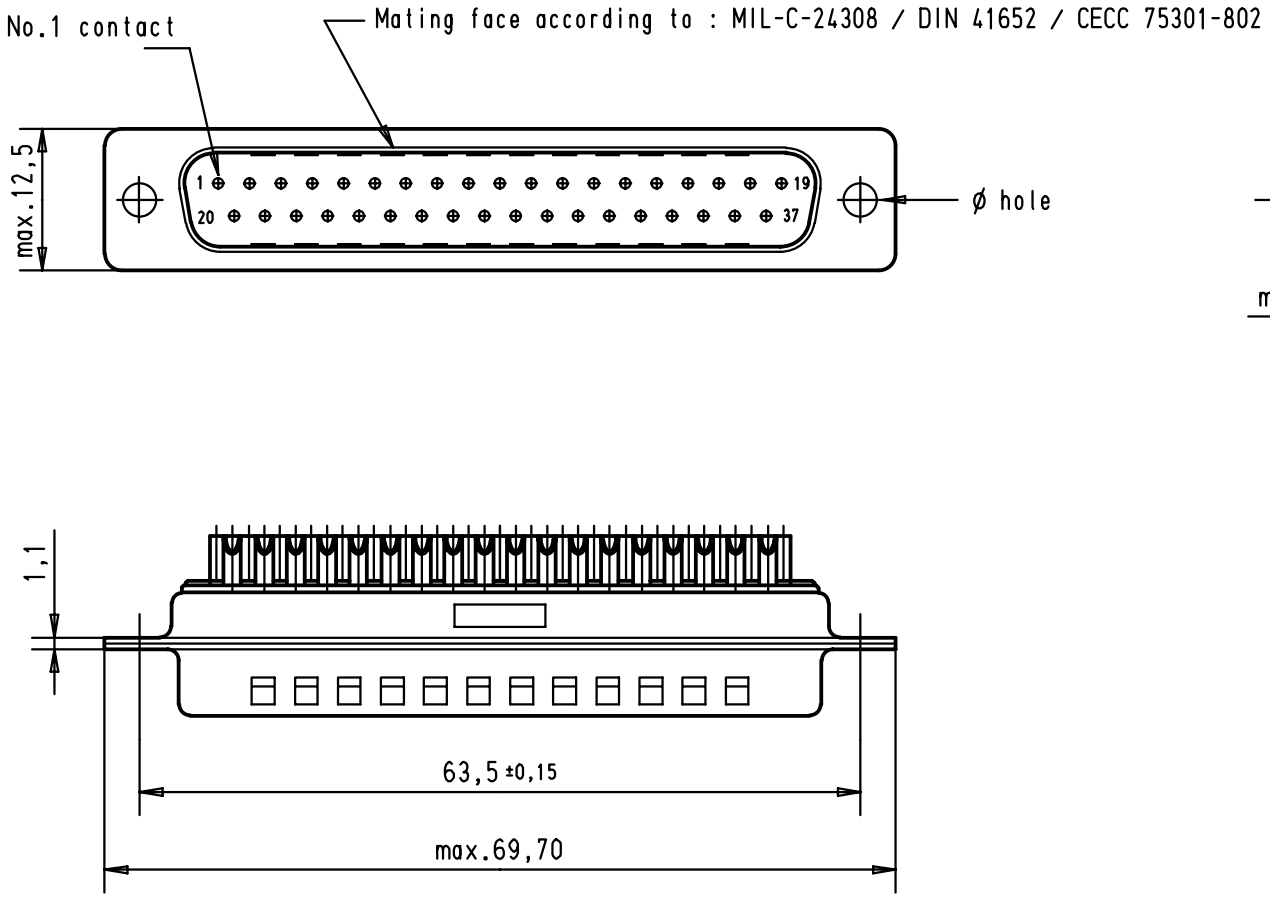

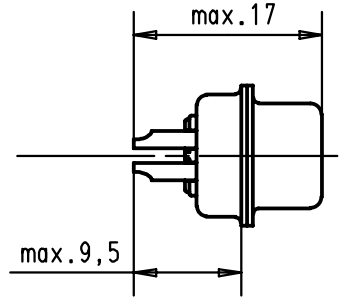

Max wire ø 1,05 mm

Part number	ø hole	Performance level	Mod.	Dat.	Name
09 67 037 5615.05	3.1 +0.1	S4			
09 67 037 5615.00	3.1 +0.1	2			
09 67 037 5604.00	3.1 +0.1	3			
			29700	18/07/01	AF

	Dat.	Name
Detail.	18/07/01	AF
Insp.		
Stand.		

All Dim. in mm
Orig. Size DIN A 4

HARTING EURL
F-95972 Paris

D-Sub, Male, Straight, 37 Poles with turned solder buckets and hole

TB 096703756xx

Sub.

Maßstab/ *Scale* 1.5:1

Blatt/ *Page* 1/1