嘉尼企業股份有限公司 CANAL ELECTRONIC CO.,LTD.

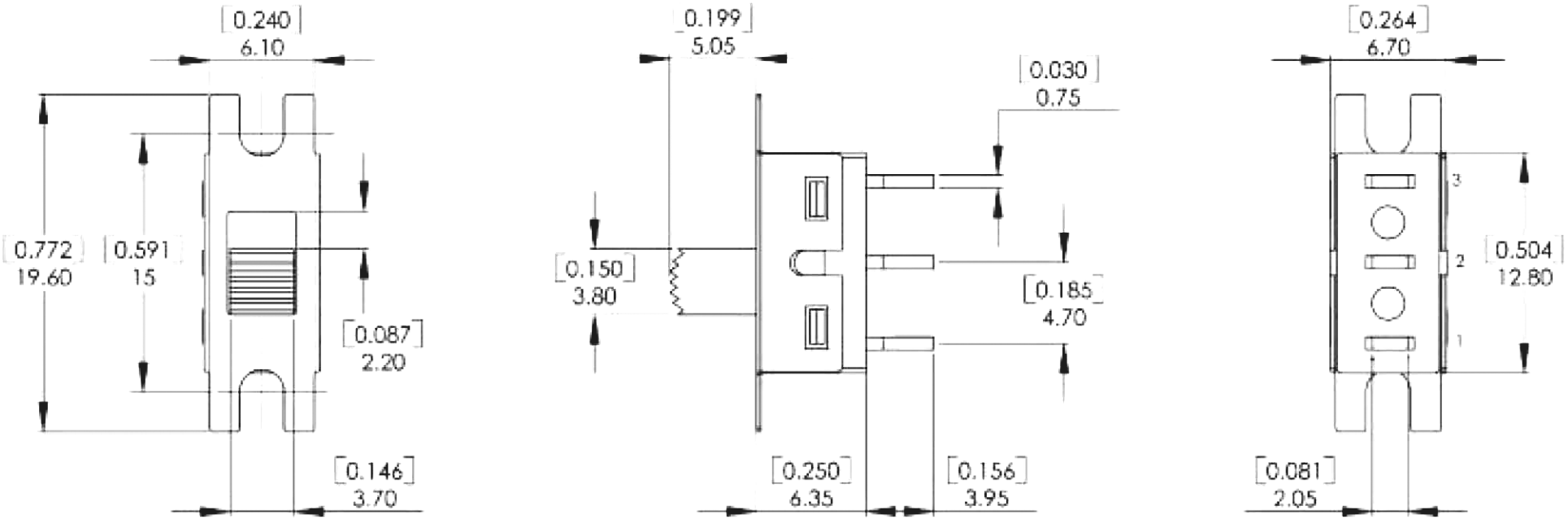

SPECIFICATIONS:

CONTACT RATING :

6 AMPS @ 120 V AC or 28 V DC.
3AMPS @250 V AC or 0.4 AMPS @ 20V AC or DC

ELECTRICAL LIFE :

6,000 make-and-break cycles at full load.

CONTACT RESISTANCE :

10 mΩ max. initial @ 2-4 V DC.
100 mA, for both silver and gold plated contacts.

INSULATION RESISTANCE : 1,000 MΩ min.
DIELETRIC STRENGTH : 1,000 V RMS @ sea level.
OPERATING TEMPERATURE : -30 ℃ to 130 ℃

MATERIALS:

CASE : Diallyl phthalate (DAP)(UL-94V-0).
ACTUATOR : Nylon.
BUSHING : Brass, nickel plated.
HOUSING : Stainless steel.
TERMINAL/CONTACT :
Brass, with silver or gold plated.
or gold over silver
SWITCH SUPPORT : Brass, tin plated.

NOTE TOLERANCES UNLESS OTHERWISE SPECIFIED: $\pm \frac{.012}{0.3}$ (in/mm)

Schematic

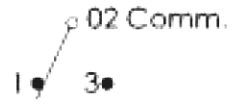

Model NO.	TYPE		
SL19-120	ON	NONE	ON
Tem. Comm.	2-1	OPEN	2-3

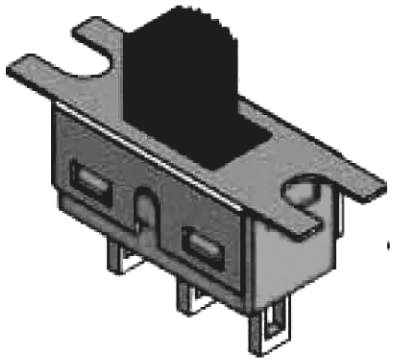

REVISION	DESCRIPION	REVISED BY	TOLEANCES .X .XX ANGLE ½°					UNIT	mm	PART NAME	SL19 SPEC DRAWING	DWG NO
4			DRAWN BY	Alice	DESIGNED BY	Eric	SCALE					WS0381B
3												
2 2010.07.07	ILIIFE 修改	吳美玉	CHECKED BY	Jiang	APPROVED BY		DATE	2006.06.12		PART NO	SL19-120	
1 2006.06.12	換新圖框,重新圖框	吳美玉										