嘉尼企業股份有限公司CANAL ELECTRONIC CO.,LTD.

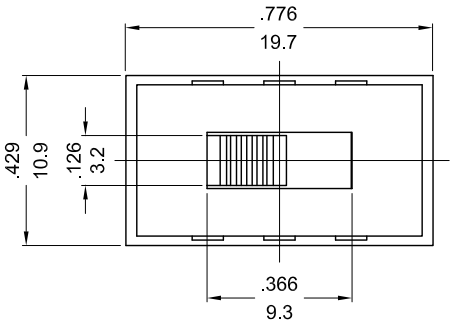

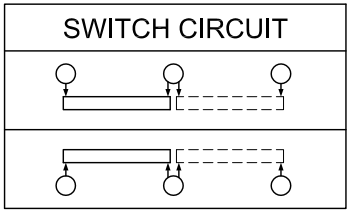

SLIDE SWITCH MODEL SL16 SERIES

RATING:4A 125VAC (UL)
2A 250VAC (UL)
CONTACT RESTSTANCE:20mΩ INITIAL(MAX)
INSULATION RESISTANCE:DC 500V 100MΩ(MIN.)
DELECTRIC VOLTAGE-WITHSTAND:1,000VAC FOR 1 MINUTE

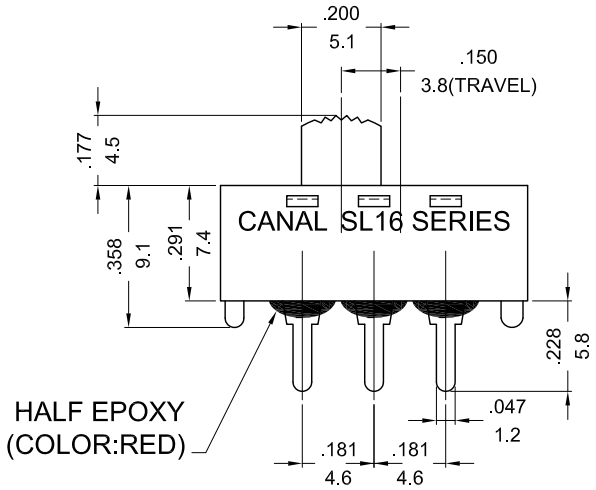

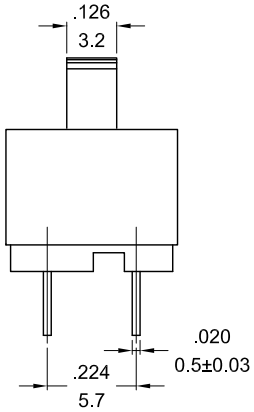

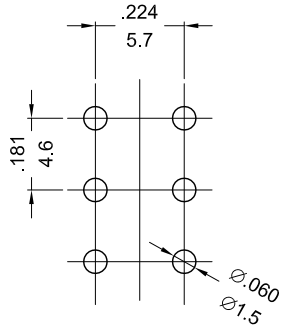

P.C. BOARD HOLE

TOLERANCES UNLESS OTHERWISE SPECIFIED:±.012/0.3(in/mm)

REVISION	DESCRIPTION	REVISED BY	TOLERANCES			ANGLE ½°	UNIT	mm	PART NAME	SL16 SPEC DRAWING	DWG NO
4			DRAWN BY	向宏	DESIGNED BY	聶明	SCALE	2/1			S3239C
3 2013.09.16	整理圖面，重新出圖	向 宏									
2 2011.01.24	整理圖面，重新出圖	錢冬亮	CHECKED BY	2013.10.14 09:52:58 +08'00'	APPROVED BY	2013.10.14 09:53:10 +08'00'	DATE	2009.11.26	PART NO	SL16-(24AN)C	
1 2009.11.26	首次出圖	向 宏									