POWERTIP TECH. CORP.

SPECIFICATIONS

CUSTOMER	:	PTC
SAMPLE CODE	:	SH240320T-063-L-Q
MASS PRODUCTION CODE	:	PH240320T-063-L-Q
SAMPLE VERSION	:	01
SPECIFICATIONS EDITION	:	005
DRAWING NO. (Ver.)	:	LMD-PH240320T-063-L-Q (Ver:002)
PACKAGING NO. (Ver.)	:	PKG-PH240320T-063-L-Q (Ver:002)

Customer Approved

Date:

Approved	Checked	Designer
廖志豪 Rex Liao	廖志豪 Rex Liao	張慶源 Yuan Chang

POWERTIP
2014.03.31
TW RD APR

☐ Preliminary specification for design input

■ Specification for sample approval

POWERTIP TECH. CORP.

Headquarters:

No.8, 6th Road, Taichung Industrial Park,
Taichung, Taiwan
台中市 407 工業區六路 8 號

TEL: 886-4-2355-8168
FAX: 886-4-2355-8166

E-mail: sales@powertip.com.tw
Http://www.powertip.com.tw

History of Version

Date (mm / dd / yyyy)	Ver.	Edi.	Description	Page	Design by
2012/08/06	01	001	New Drawing	-	Yuan
2012/11/01	01	002	New Sample	-	Yuan
2013/07/08	01	003	Modify Optical Characteristics	6	Yuan
2013/12/27	01	004	Modify LCM Packaging Specifications	Appendix	Yuan
2014/03/27	01	005	Modify Optical Characteristics Modify Drawing	6 Appendix	Yuan

Total: 28 Page

Contents

Note : For detailed information please refer to IC data sheet :
Primacy(TFT LCD): ILITEK: ILI9341

1. SPECIFICATIONS

1.1 Features

Main LCD panel

Item	Standard Value
Display Type	240(R、G、B) * 320 Dots
LCD Type	Normally white , Transmissive type
Screen size(inch)	2.8 inch
Viewing Direction	12 O'clock
Color configuration	RGB-Strip
Backlight	LED Backlight
Interface	16-bit 80-system I/F
Other(controller/driver IC)	ILITEK: ILI9341
ROHS	THIS PRODUCT CONFORMS THE ROHS OF PTC Detail information please refer website : http://www.powertip.com.tw/news.php?area_id_view=1085560481/

1.2 Mechanical Specifications

Item	Standard Value	Unit
Outline Dimension	50.0(W) * 69.2 (L) * 3.05 (H)max	mm

LCD panel

Item	Standard Value	Unit
Active Area	43.2 (W) * 57.6 (L)	mm

1.3 Absolute Maximum Ratings

Module

Item	Symbol	Condition	Min.	Max.	Unit
System Power Supply Voltage	VCC	-	-0.3	+4.6	V
	VGH ~ VGL	-	-0.3	+32	V
Input Voltage	VIN	-	-0.3	VCC+0.3	V
Operating Temperature	T_{OP}	-	-20	+70	°C
Storage Temperature	T_{ST}	-	-30	+80	°C
Storage Humidity	H_D	Ta ≦ 40 °C	20	90	%RH

1.4 DC Electrical Characteristics

Module GND = 0V, Ta = 25°C

Item	Symbol	Condition	Min.	Typ.	Max.	Unit
Power Supply Voltage1	VCC	-	-	2.8	-	V
Input High Voltage	V_{IH}	-	0.7 VCC	-	VCC	V
Input Low Voltage	V_{IL}	-	GND	-	0.3 VCC	V
Output High Voltage	V_{OH}	IOH=-0.1mA	0.8*VDD	-	VDD	V
Output Low Voltage	V_{OL}	IOL=0.1mA	GND	-	0.2*VDD	V
Supply Current	ICC	VCC = 2.8V Pattern=full display *1	-	9	12	mA

Note1:Maximum current display

1.5 Optical Characteristics

TFT LCD Module VCC = 2.8V, Ta=25°C

Item		Symbol	Condition	Min.	Typ.	Max.	unit	-
Response time		Tr+ Tf	Ta = 25°C θX, θY = 0°	-	31	47	ms	Note2
Viewing angle	Top	θY+	CR ≥ 10	-	60	-	Deg.	Note4
	Bottom	θY-		-	60	-		
	Left	θX-		-	60	-		
	Right	θX+		-	60	-		
Contrast ratio		CR	Ta = 25°C θX , θY = 0°	500	600	-	-	Note3
Color of CIE Coordinate（With B/L）	White	X	-	0.25	0.30	0.35	-	Note1
		Y		0.28	0.33	0.38		
	Red	X		0.58	0.63	0.68		
		Y		0.3	0.35	0.4		
	Green	X		0.29	0.34	0.39		
		Y		0.56	0.61	0.66		
	Blue	X		0.09	0.14	0.19		
		Y		0.02	0.07	0.12		
Average Brightness Pattern=white display (With B/L) *1		IV	IF=80 mA	230	255	-	cd/m^2	
Uniformity (With B/L)*2		△B	IF=80 mA	70	-	-	%	

Note 1:

*1：△B=B(min) / B(max) * 100%

*2：Measurement Condition for Optical Characteristics:

a：Environment: 25℃±5℃ / 60±20%R.H，no wind，dark room below 10 Lux at typical lamp current and typical operating frequency.

b：Measurement Distance: 500 ± 50 ㎜ ，(θ= 0°)

c：Equipment: TOPCON BM-7 fast，(field 1°)，after 10 minutes operation.

d：The uncertainty of the C.I.E coordinate measurement ±0.01，Average Brightness ± 4%

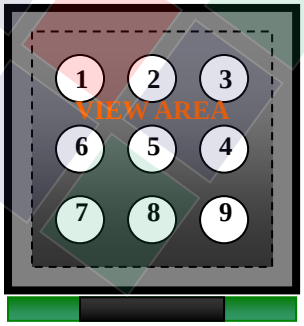

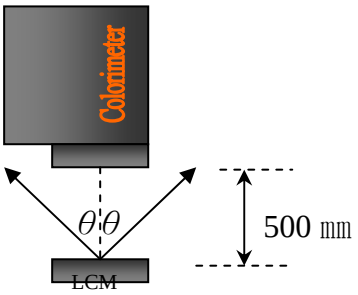

Colorimeter=BM-7 fast

To be measured at the center area of panel with a viewing cone of 1° by Topcon

luminance meter BM-7, after 10 minutes operation (module)

Note2: Definition of response time:

The output signals of photo detector are measured when the input signals are changed from “black” to “white”(falling time) and from “white” to “black”(rising time), respectively. The response time is defined as the time interval between the 10% and 90% of Amplitudes.

Refer to figure as below:

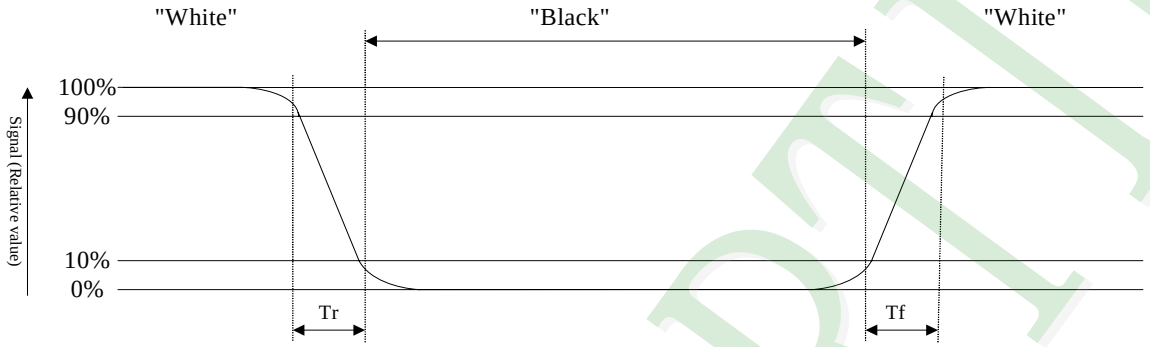

Note3: Definition of contrast ratio:

Contrast ratio is calculated with the following formula

$$\text{Contrast ratio (CR)} = \frac{\text{Photo detector output when LCD is at “White” state}}{\text{Photo detector output when LCD is at “Black” state}}$$

Note4: Definition of viewing angle:

Refer to figure as below:

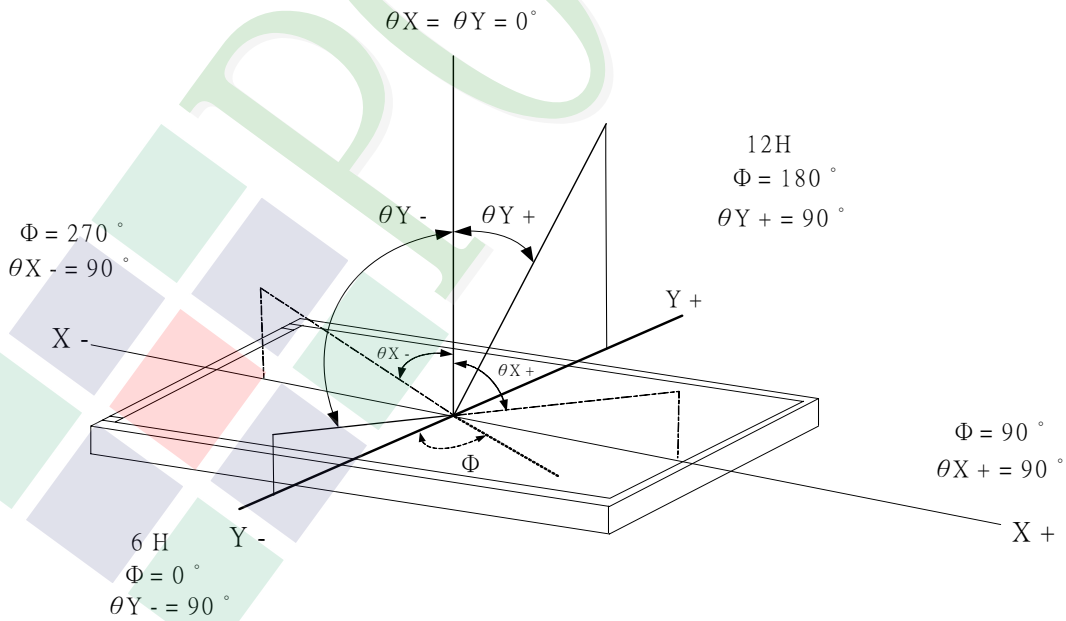

1.6 Backlight Characteristics

Maximum Ratings

Item	Symbol	Conditions	Min.	Max.	Unit
Power Dissipation	PD	Ta =25℃	—	0.288	W

Electrical / Optical Characteristics

Item	Symbol	Conditions	Min.	Typ.	Max.	Unit
Forward Voltage	VF	IF= 80 mA	2.8	—	3.6	V
Average Brightness (without LCD)	IV		5000	5500	—	cd/m^2
CIE Color Coordinate (Without LCD)	X		0.26	0.28	0.33	-
	Y		0.26	0.28	0.33	
Color	White					

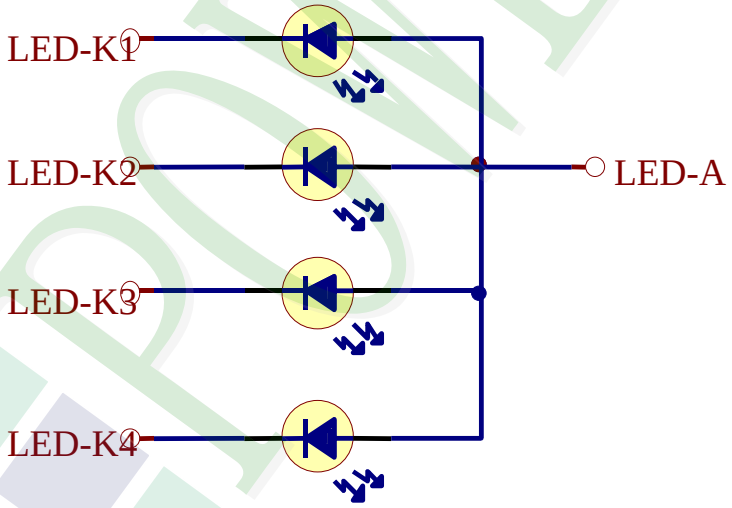

2.1 Counter Drawing

2.1.1 LCM Mechanical Diagram

* See Appendix

2.1.2 Block Diagram

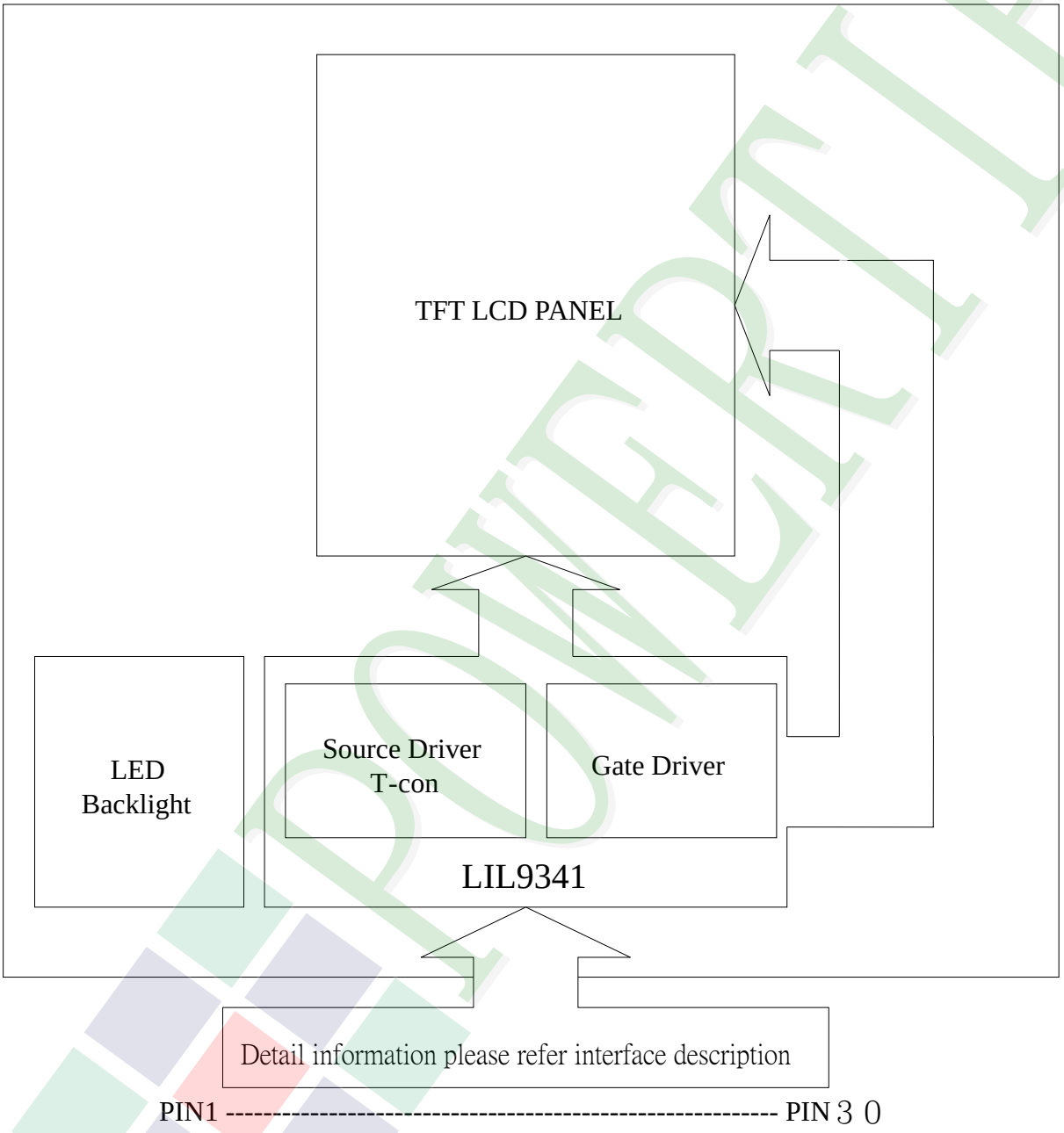

2.2 Interface Pin Description

Pin No.	Symbol	Function
1	LEDK1-4	Power supply for LED Backlight Cathode input
2	LEDA	Power supply for LED Backlight Anode input
3	GND	Signal ground.(0V)
4	RESET	Reset input pin for TFT LCD. When RESET is “L”, initialization is executed.
5	DB17	Bi-directional data bus
6	DB16	
7	DB15	
8	DB14	
9	DB13	
10	DB12	
11	DB11	
12	DB10	
13	DB8	
14	DB7	
15	DB6	
16	DB5	
17	DB4	
18	DB3	
19	DB2	
20	DB1	
21	RD	Read signal input，active at Low.
22	WR/SCL	Write signal input，active at Low.
23	RS	When RS = 0: Command. When RS = 1: Display data.
24	CS	Chip select signal , Active at ”L”
25	XR/X+	NC

Pin No.	Symbol	Function
26	YD/Y-	NC
27	XL/X-	
28	YU/Y+	
29	GND	Signal ground.(0V)
30	2.8 /VCC	Power supply for the internal logic circuit.

2.3 Timing Characteristics

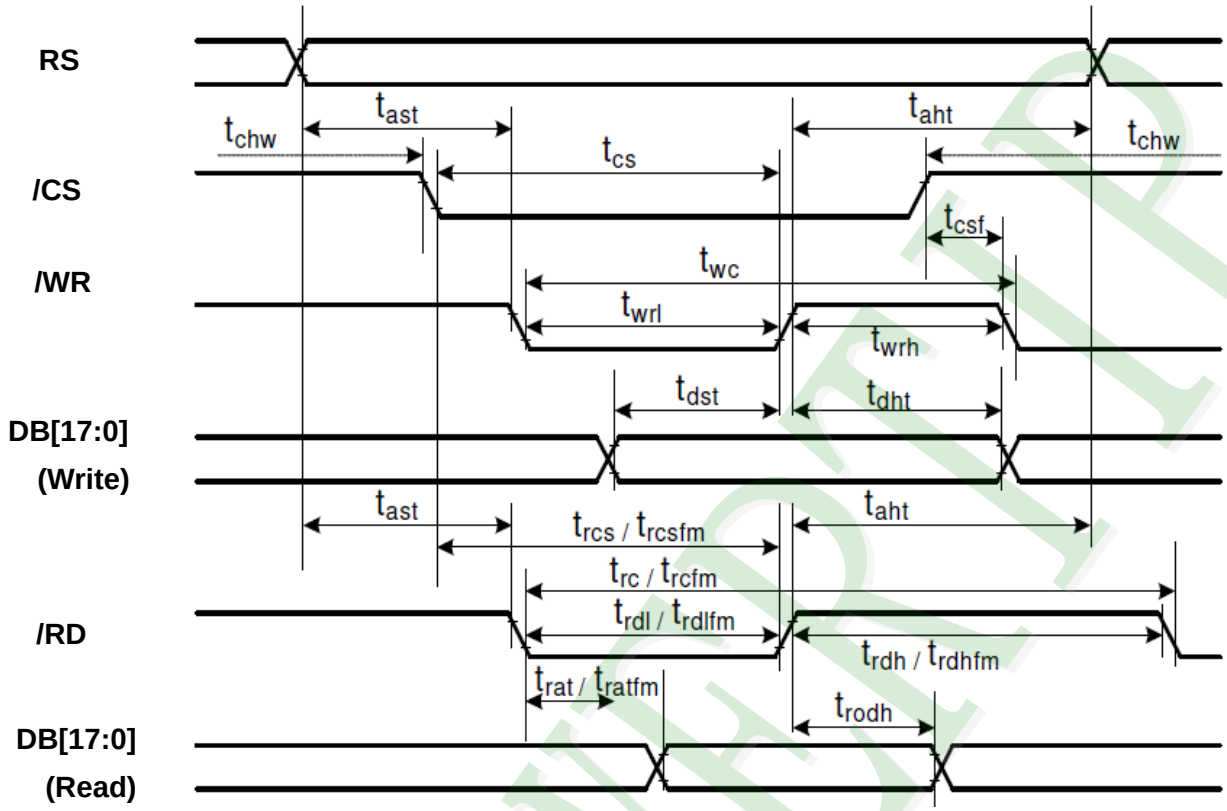

Signal	Symbol	Parameter	min	max	Unit	Description
RS	tast	Address setup time	0	-	ns	
	taht	Address hold time (Write/Read)	0	-	ns	
/CS	tchw	CSX "H" pulse width	0	-	ns	
	tcs	Chip Select setup time (Write)	15	-	ns	
	trcs	Chip Select setup time (Read ID)	45	-	ns	
	trcsfm	Chip Select setup time (Read FM)	355	-	ns	
	tcsf	Chip Select Wait time (Write/Read)	10	-	ns	
/WR	twc	Write cycle	66	-	ns	
	twrh	Write Control pulse H duration	15	-	ns	
	twrl	Write Control pulse L duration	15	-	ns	
/RD(FM)	trcfm	Read Cycle (FM)	450	-	ns	
	trdhfm	Read Control H duration (FM)	90	-	ns	
	trdlfm	Read Control L duration (FM)	355	-	ns	
/RD(ID)	trc	Read cycle (ID)	160	-	ns	
	trdh	Read Control pulse H duration	90	-	ns	
	trdl	Read Control pulse L duration	45	-	ns	
DB[17:0] DB[17:0] DB[8:0] DB[7:0]	tdst	Write data setup time	10	-	ns	For maximum CL=30pF For minimum CL=8pF
	tdht	Write data hold time	10	-	ns	
	trat	Read access time	-	40	ns	
	tratfm	Read access time	-	340	ns	
	trod	Read output disable time	20	80	ns	

Note: Ta = -30 to 70 °C, VCC=1.65V to 3.3V, VCI=2.5V to 3.3V, GND=0V

Reset Timing

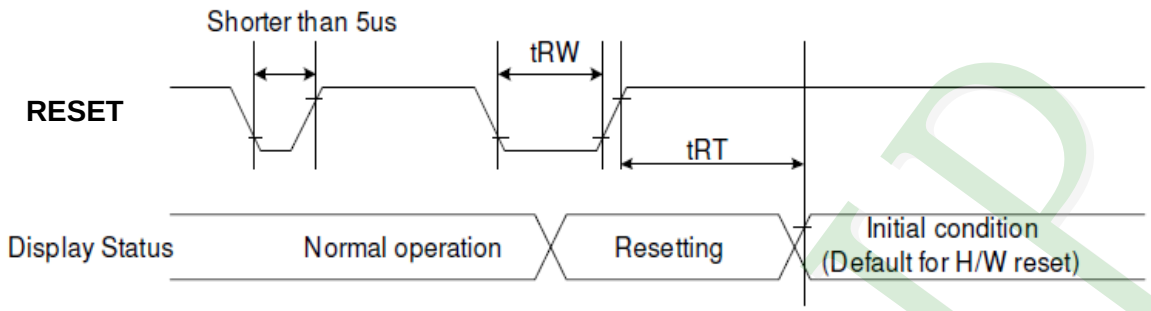

Signal	Symbol	Parameter	Min	Max	Unit
RESX	tRW	Reset pulse duration	10		uS
	tRT	Reset cancel		5 (note 1,5)	mS
				120 (note 1,6,7)	mS

Note 1: The reset cancel includes also required time for loading ID bytes, VCOM setting and other settings from NV memory to registers. This loading is done every time when there is HW reset cancel time (tRT) within 5 ms after a rising edge of RESX.

Note 2: Spike due to an electrostatic discharge on RESX line does not cause irregular system reset according to the table below: -

RESX Pulse	Action
Shorter than 5us	Reset Rejected
Longer than 10us	Reset
Between 5us and 10us	Reset starts

Note 3: During the Resetting period, the display will be blanked (The display is entering blanking sequence, which maximum time is 120 ms, when Reset Starts in Sleep Out –mode. The display remains the blank state in Sleep In -mode.) And then return to Default condition for Hardware Reset.

Note 4: Spike Rejection also applies during a valid reset pulse as shown below:

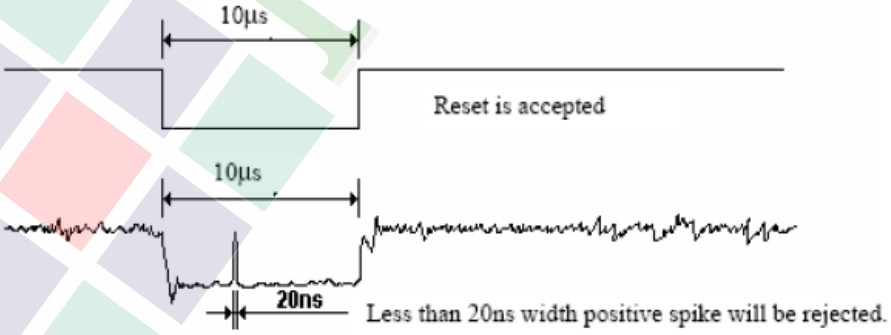

Note 5: When Reset applied during Sleep In Mode.

Note 6: When Reset applied during Sleep Out Mode.

Note 7: It is necessary to wait 5msec after releasing RESX before sending commands. Also Sleep Out command cannot be sent for 120msec.

2.4 Reference Initial code

```
MOV     ADDRH,#00H
MOV     ADDRL,#CBH
CALL    WRITE_COMMAND
MOV     ADDRL,#39H
CALL    WRITE_DATA
MOV     ADDRL,#2CH
CALL    WRITE_DATA
MOV     ADDRL,#00H
CALL    WRITE_DATA
MOV     ADDRL,#34H
CALL    WRITE_DATA
MOV     ADDRL,#02H
CALL    WRITE_DATA

MOV     ADDRL,#CFH
CALL    WRITE_COMMAND
MOV     ADDRL,#00H
CALL    WRITE_DATA
MOV     ADDRL,#C1H
CALL    WRITE_DATA
MOV     ADDRL,#30H
CALL    WRITE_DATA

MOV     ADDRL,#E8H
CALL    WRITE_COMMAND
MOV     ADDRL,#85H
CALL    WRITE_DATA
MOV     ADDRL,#00H
CALL    WRITE_DATA
MOV     ADDRL,#78H
CALL    WRITE_DATA
MOV     ADDRH,#00H
MOV     ADDRL,#EAH
CALL    WRITE_COMMAND
MOV     ADDRL,#00H
CALL    WRITE_DATA
MOV     ADDRL,#00H
CALL    WRITE_DATA

MOV     ADDRH,#00H
MOV     ADDRL,#EDH
CALL    WRITE_COMMAND
MOV     ADDRL,#64H
CALL    WRITE_DATA
MOV     ADDRL,#03H
CALL    WRITE_DATA
MOV     ADDRL,#12H
CALL    WRITE_DATA
MOV     ADDRL,#81H
CALL    WRITE_DATA

MOV     ADDRH,#00H
MOV     ADDRL,#F7H
CALL    WRITE_COMMAND
MOV     ADDRL,#20H
CALL    WRITE_DATA
```

```
MOV     ADDRH,#00H
MOV     ADDRL,#C0H
CALL    WRITE_COMMAND
MOV     ADDRL,#23H
CALL    WRITE_DATA

MOV     ADDRH,#00H
MOV     ADDRL,#C1H
CALL    WRITE_COMMAND
MOV     ADDRL,#10H
CALL    WRITE_DATA

MOV     ADDRH,#00H
MOV     ADDRL,#C5H
CALL    WRITE_COMMAND
MOV     ADDRL,#2BH
CALL    WRITE_DATA
MOV     ADDRL,#2BH
CALL    WRITE_DATA

MOV     ADDRH,#00H
MOV     ADDRL,#C7H
CALL    WRITE_COMMAND
MOV     ADDRL,#C0H
CALL    WRITE_DATA

MOV     ADDRH,#00H
MOV     ADDRL,#36H
CALL    WRITE_COMMAND
MOV     ADDRL,#40H
CALL    WRITE_DATA


MOV     ADDRH,#00H
MOV     ADDRL,#B1H
CALL    WRITE_COMMAND
MOV     ADDRL,#00H
CALL    WRITE_DATA
MOV     ADDRL,#1BH
CALL    WRITE_DATA

MOV     ADDRH,#00H
MOV     ADDRL,#B6H
CALL    WRITE_COMMAND
MOV     ADDRL,#0AH
CALL    WRITE_DATA
MOV     ADDRL,#02H
CALL    WRITE_DATA

MOV     ADDRH,#00H
MOV     ADDRL,#F2H
CALL    WRITE_COMMAND
MOV     ADDRL,#00H
CALL    WRITE_DATA

MOV     ADDRH,#00H
MOV     ADDRL,#26H
CALL    WRITE_COMMAND
MOV     ADDRL,#01H
```

```
CALL      WRITE_DATA

MOV       ADDRH,#00H
MOV       ADDRL,#3AH
CALL      WRITE_COMMAND
MOV       ADDRL,#55H
CALL      WRITE_DATA

MOV       ADDRH,#00H
MOV       ADDRL,#21H
CALL      WRITE_COMMAND


MOV       ADDRH,#00H
MOV       ADDRL,#E0H
CALL      WRITE_COMMAND
MOV       ADDRL,#0FH
CALL      WRITE_DATA
MOV       ADDRL,#31H
CALL      WRITE_DATA
MOV       ADDRL,#2BH
CALL      WRITE_DATA
MOV       ADDRL,#0CH
CALL      WRITE_DATA
MOV       ADDRL,#0EH
CALL      WRITE_DATA
MOV       ADDRL,#08H
CALL      WRITE_DATA
MOV       ADDRL,#4EH
CALL      WRITE_DATA
MOV       ADDRL,#F1H
CALL      WRITE_DATA
MOV       ADDRL,#37H
CALL      WRITE_DATA
MOV       ADDRL,#07H
CALL      WRITE_DATA
MOV       ADDRL,#10H
CALL      WRITE_DATA
MOV       ADDRL,#03H
CALL      WRITE_DATA
MOV       ADDRL,#0EH
CALL      WRITE_DATA
MOV       ADDRL,#09H
CALL      WRITE_DATA
MOV       ADDRL,#00H
CALL      WRITE_DATA

MOV       ADDRH,#00H
MOV       ADDRL,#E1H
CALL      WRITE_COMMAND
MOV       ADDRL,#00H
CALL      WRITE_DATA
MOV       ADDRL,#0EH
CALL      WRITE_DATA
MOV       ADDRL,#14H
CALL      WRITE_DATA
MOV       ADDRL,#03H
CALL      WRITE_DATA
MOV       ADDRL,#11H
```

```
CALL    WRITE_DATA
MOV     ADDRL,#07H
CALL    WRITE_DATA
MOV     ADDRL,#31H
CALL    WRITE_DATA
MOV     ADDRL,#C1H
CALL    WRITE_DATA
MOV     ADDRL,#48H
CALL    WRITE_DATA
MOV     ADDRL,#08H
CALL    WRITE_DATA
MOV     ADDRL,#0FH
CALL    WRITE_DATA
MOV     ADDRL,#0CH
CALL    WRITE_DATA
MOV     ADDRL,#31H
CALL    WRITE_DATA
MOV     ADDRL,#36H
CALL    WRITE_DATA
MOV     ADDRL,#0FH
CALL    WRITE_DATA

MOV     ADDRH,#00H
MOV     ADDRL,#11H
CALL    WRITE_COMMAND

CALL    DELAY
CALL    DELAY
CALL    DELAY
CALL    DELAY

MOV     ADDRH,#00H
MOV     ADDRL,#29H
CALL    WRITE_COMMAND
```

3. QUALITY ASSURANCE SYSTEM

3.1 Quality Assurance Flow Chart

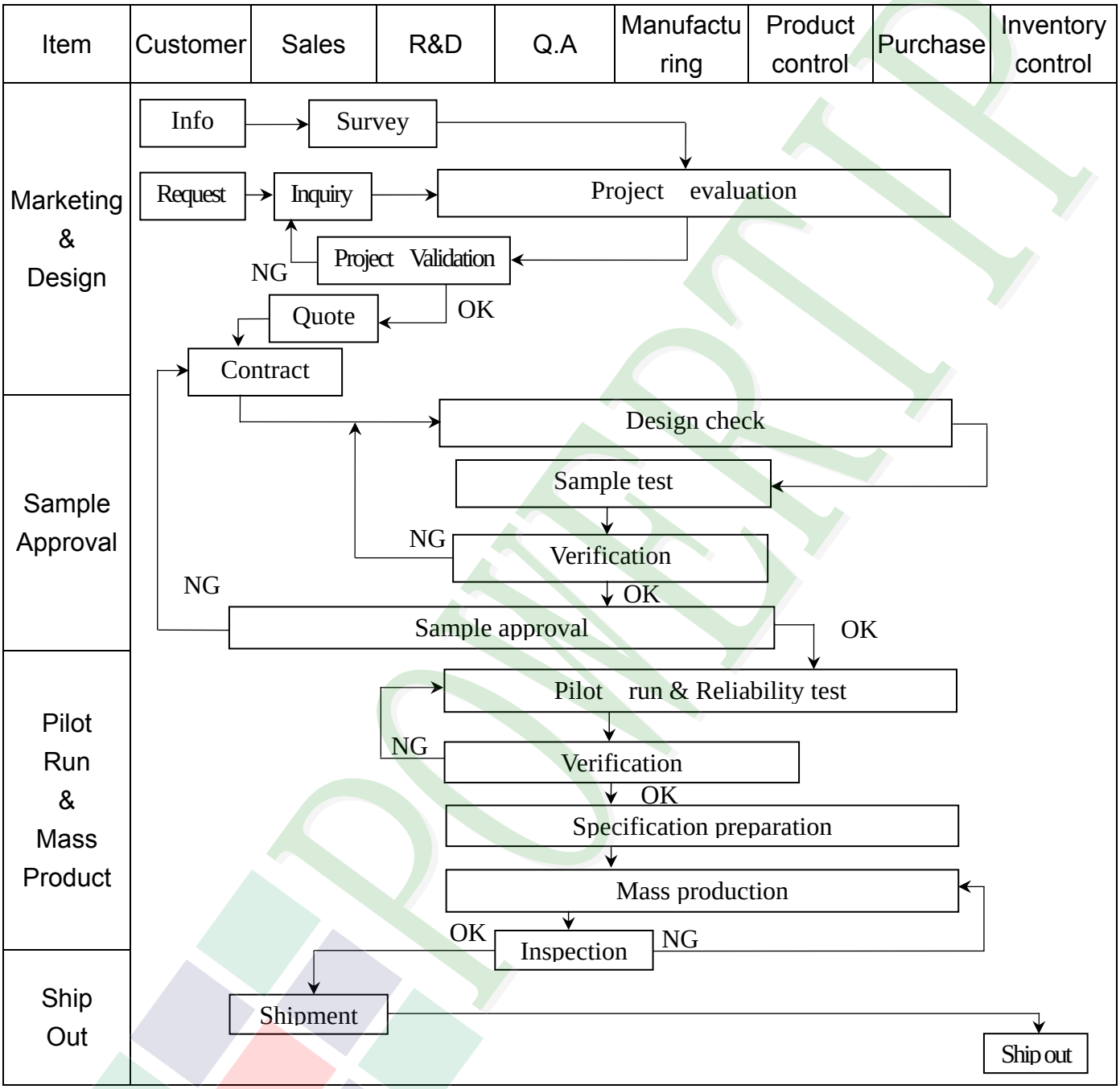

Item	Customer	Sales	R&D	Q.A	Manufacturing	Product control	Purchase	Inventory control
Sales Service	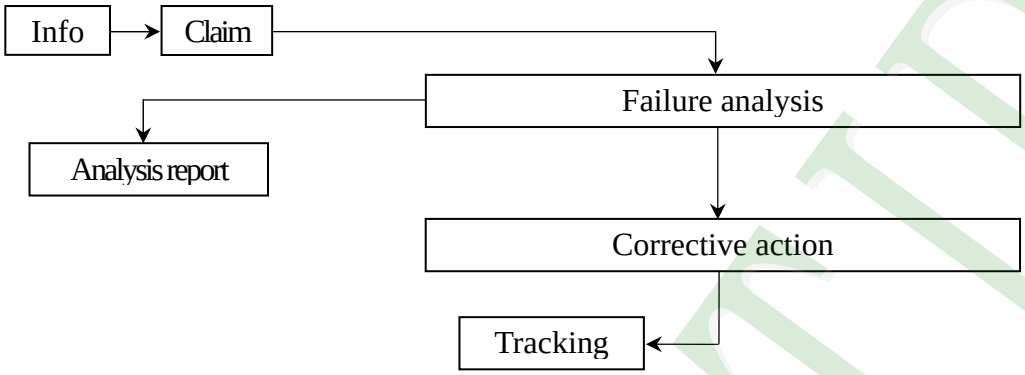							
Q.A Activity	1. ISO 9001 Maintenance Activities 2. Process improvement proposal 3. Equipment calibration 4. Education And Training Activities 5. Standardization Management							

3.2 Inspection Specification

◆Scope ：The document shall be applied to TFT-LCD Module for less than 3.5″ (Ver.B01).

◆Inspection Standard：MIL-STD-105E Table Normal Inspection Single Sampling Level Ⅱ.

◆Equipment：Gauge、MIL-STD、Powertip Tester、Sample

◆Defect Level：Major Defect AQL： 0.4 ; Minor Defect AQL： 1.5

◆OUT Going Defect Level：Sampling.

◆Standard of the product appearance test：

a. Manner of appearance test：

(1). The test best be under 20W×2 fluorescent light，and distance of view must be at 30 cm.

(2). The test direction is base on about around 45° of vertical line.

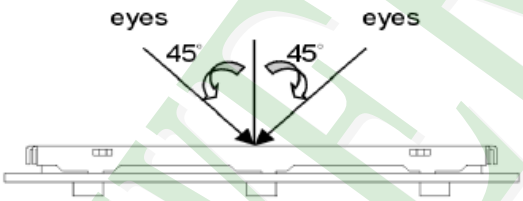

(3). Definition of area.

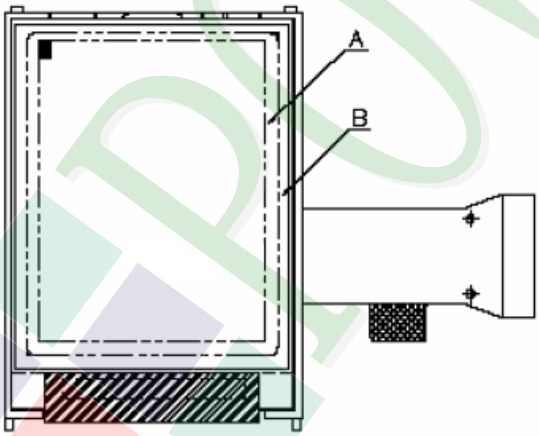

A area : viewing area

B area : Outside of viewing area

(4). Standard of inspection： (Unit：mm)

◆Specification For TFT-LCD Module Less Than 3.5″：

(Ver.B01)

<table>
<tr><th>NO</th><th>Item</th><th>Criterion</th><th>Level</th></tr>
<tr><td rowspan="3">01</td><td rowspan="3">Product condition</td><td>1.1 The part number is inconsistent with work order of production.</td><td>Major</td></tr>
<tr><td>1.2 Mixed product types.</td><td>Major</td></tr>
<tr><td>1.3 Assembled in inverse direction.</td><td>Major</td></tr>
<tr><td>02</td><td>Quantity</td><td>2.1 The quantity is inconsistent with work order of production.</td><td>Major</td></tr>
<tr><td>03</td><td>Outline dimension</td><td>3.1 Product dimension and structure must conform to structure diagram.</td><td>Major</td></tr>
<tr><td rowspan="5">04</td><td rowspan="5">Electrical Testing</td><td>4.1 Missing line character and icon.</td><td>Major</td></tr>
<tr><td>4.2 No function or no display.</td><td>Major</td></tr>
<tr><td>4.3 Display malfunction.</td><td>Major</td></tr>
<tr><td>4.4 LCD viewing angle defect.</td><td>Major</td></tr>
<tr><td>4.5 Current consumption exceeds product specifications.</td><td>Major</td></tr>
<tr><td>05</td><td>Dot defect

(Bright dot、Dark dot)

On -display</td><td>
<table>
<tr><th colspan="2">Item</th><th>Acceptance (Q'ty)</th></tr>
<tr><td rowspan="4">Dot Defect</td><td>Bright Dot</td><td>≦ 2</td></tr>
<tr><td>Dark Dot</td><td>≦ 3</td></tr>
<tr><td>Joint Dot</td><td>≦ 2</td></tr>
<tr><td>Total</td><td>≦ 3</td></tr>
</table>
5.1 Inspection pattern：full white , full black , Red , Green and blue screens.
5.2 It is defined as dot defect if defect area ＞1/2 dot.
5.3 The distance between two dot defect ≧5 mm.
</td><td>Minor</td></tr>
</table>

◆Specification For TFT-LCD Module Less Than 3.5″：

(Ver.B01)

<table>
<tr><th>NO</th><th>Item</th><th>Criterion</th><th>Level</th></tr>
<tr><td>06</td><td>Black or white dot、scratch、contamination

Round type
 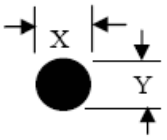

Φ=(x+y) / 2

Line type
 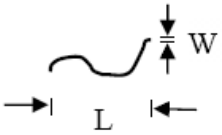
</td><td>6.1 Round type (Non-display or display)：
<table>
<tr><th rowspan="2">Dimension
(diameter：Φ)</th><th colspan="2">Acceptance (Q’ty)</th></tr>
<tr><th>A area</th><th>B area</th></tr>
<tr><td>Φ ≦ 0.15</td><td>Ignore</td><td rowspan="4">Ignore</td></tr>
<tr><td>0.15 ＜ Φ ≦ 0.20</td><td>2</td></tr>
<tr><td>0.20 ＜ Φ ≦ 0.30</td><td>2</td></tr>
<tr><td>Φ ＞ 0.30</td><td>0</td></tr>
<tr><td>Total</td><td>3</td><td></td></tr>
</table>
6.2 Line type(Non-display or display)：
<table>
<tr><th colspan="2">Dimension</th><th colspan="2">Acceptance (Q’ty)</th></tr>
<tr><th>Length (L)</th><th>Width (W)</th><th>A area</th><th>B area</th></tr>
<tr><td>---</td><td>W ≦ 0.03</td><td>Ignore</td><td rowspan="4">Ignore</td></tr>
<tr><td>L ≦5.0</td><td>0.03 ＜W ≦ 0.05</td><td>3</td></tr>
<tr><td>---</td><td>W ＞0.05</td><td>As round type</td></tr>
<tr><td colspan="2">Total</td><td>3</td><td></td></tr>
</table></td><td>Minor</td></tr>
<tr><td>07</td><td>Polarizer Bubble</td><td>
<table>
<tr><th rowspan="2">Dimension
(diameter：Φ)</th><th colspan="2">Acceptance (Q’ty)</th></tr>
<tr><th>A area</th><th>B area</th></tr>
<tr><td>Φ ≦ 0.20</td><td>Ignore</td><td rowspan="4">Ignore</td></tr>
<tr><td>0.20 ＜ Φ ≦ 0.50</td><td>3</td></tr>
<tr><td>Φ ＞ 0.50</td><td>0</td></tr>
<tr><td>Total</td><td>3</td><td></td></tr>
</table></td><td>Minor</td></tr>
</table>

◆Specification For TFT-LCD Module Less Than 3.5″ : (Ver.B01)

NO	Item	Criterion	Level
08	The crack of glass	Symbols : X : The length of crack Y : The width of crack. Z : The thickness of crack W : terminal length t : The thickness of glass a : LCD side length 8.1 General glass chip : 8.1.1 Chip on panel surface and crack between panels: 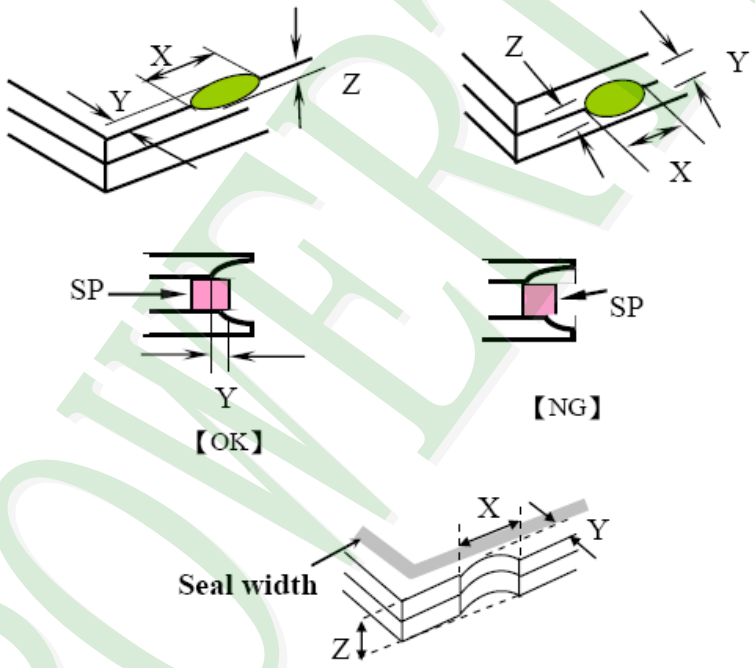 	Minor

X	Y	Z
≦ a	Crack can't enter viewing area	≦1/2 t
≦ a	Crack can't exceed the half of SP width.	1/2 t < Z ≦2 t

◆Specification For TFT-LCD Module Less Than 3.5″ : (Ver.B01)

<table>
<tr><th>NO</th><th>Item</th><th>Criterion</th><th>Level</th></tr>
<tr><td rowspan="2">08</td><td rowspan="2">The crack of glass</td><td>
Symbols :
X : The length of crack　　Y : The width of crack.
Z : The thickness of crack　　W : terminal length
t : The thickness of glass　　a : LCD side length
8.1.2 Corner crack :
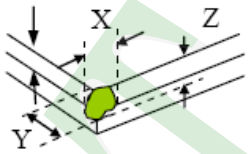

<table>
<tr><th>X</th><th>Y</th><th>Z</th></tr>
<tr><td>≦1/5 a</td><td>Crack can't enter viewing area</td><td>Z ≦ 1/2 t</td></tr>
<tr><td>≦1/5 a</td><td>Crack can't exceed the half of SP width.</td><td>1/2 t ＜ Z ≦ 2 t</td></tr>
</table>
</td><td rowspan="2">Minor</td></tr>
<tr><td>
8.2 Protrusion over terminal :
8.2.1 Chip on electrode pad :
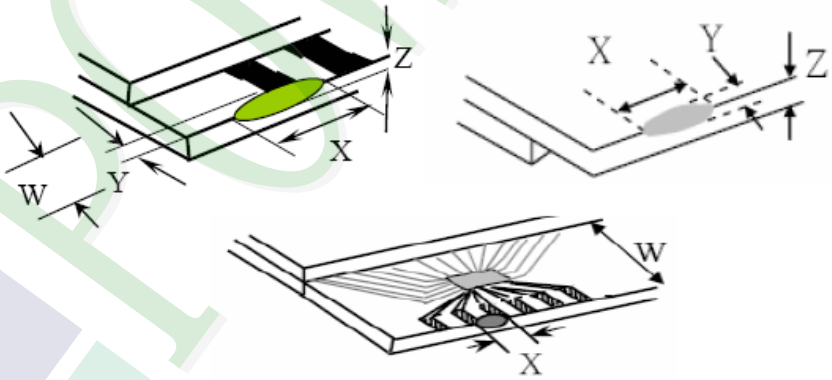

<table>
<tr><th></th><th>X</th><th>Y</th><th>Z</th></tr>
<tr><td>Front</td><td>≦ a</td><td>≦ 1/2 W</td><td>≦ t</td></tr>
<tr><td>Back</td><td>≦ a</td><td>≦ W</td><td>≦ 1/2 t</td></tr>
</table>
</td></tr>
</table>

◆Specification For TFT-LCD Module Less Than 3.5″ : (Ver.B01)

NO	Item	Criterion	Level
08	The crack of glass	Symbols : X : The length of crack　　Y : The width of crack. Z : The thickness of crack　　W : terminal length t : The thickness of glass　　a : LCD side length 8.2.2 Non-conductive portion : 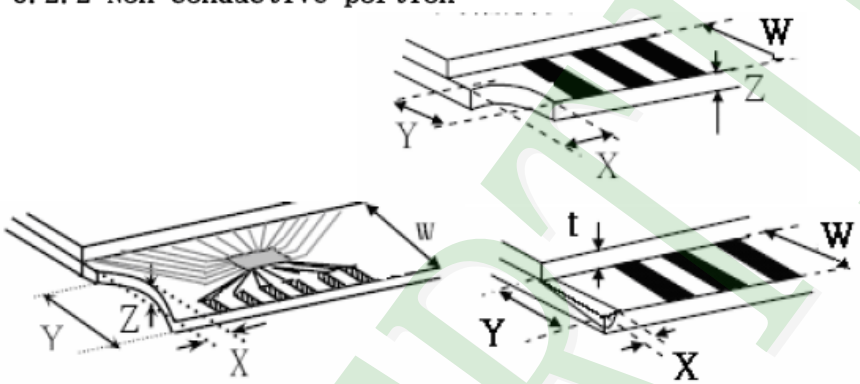 X : ≦ 1/3 a　Y : ≦W　Z : ≦t ⊙ If the chipped area touches the ITO terminal, over 2/3 of the ITO must remain and be inspected according to electrode terminal specifications. 8.2.3 Glass remain : 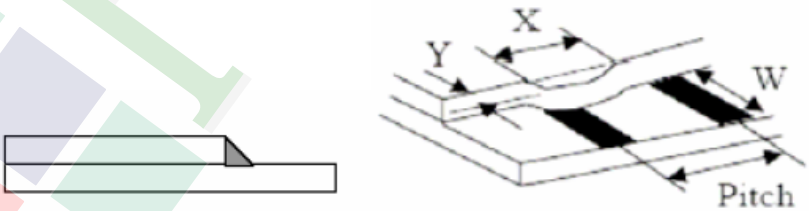 X : ≦ a　Y : ≦ 1/3 W　Z : ≦t	Minor

◆Specification For TFT-LCD Module Less Than 3.5″ : (Ver.B01)

NO	Item	Criterion	Level
09	Backlight elements	9.1 Backlight can't work normally.	Major
		9.2 Backlight doesn't light or color is wrong.	Major
		9.3 Illumination source flickers when lit.	Major
10	General appearance	10.1 Pin type、quantity、dimension must match type in structure diagram.	Major
		10.2 No short circuits in components on PCB or FPC .	Major
		10.3 Parts on PCB or FPC must be the same as on the production characteristic chart .There should be no wrong parts , missing parts or excess parts.	Major
		10.4 Product packaging must the same as specified on packaging specification sheet.	Minor
		10.5 The folding and peeled off in polarizer are not acceptable.	Minor
		10.6 The PCB or FPC between B/L assembled distance(PCB or FPC) is ≦1.5 mm.	Minor

4. RELIABILITY TEST

4.1 Reliability Test Condition (Ver.B01)

<table>
<tr><th>NO.</th><th>TEST ITEM</th><th>TEST CONDITION</th></tr>
<tr><td>1</td><td>High Temperature Storage Test</td><td>Keep in +80 ±2℃ 96 hrs
Surrounding temperature, then storage at normal condition 4hrs.</td></tr>
<tr><td>2</td><td>Low Temperature Storage Test</td><td>Keep in -30 ±2℃ 96 hrs
Surrounding temperature, then storage at normal condition 4hrs.</td></tr>
<tr><td>3</td><td>High Temperature / High Humidity Storage Test</td><td>Keep in +60 ℃ / 90% R.H duration for 96 hrs
Surrounding temperature, then storage at normal condition 4hrs.
(Excluding the polarizer)</td></tr>
<tr><td>4</td><td>Temperature Cycling Storage Test</td><td>-30℃ → +25℃ → +80℃ → +25℃
(30mins) (5mins) (30mins) (5mins)
10 Cycle
Surrounding temperature, then storage at normal condition 4hrs.</td></tr>
<tr><td rowspan="2">5</td><td rowspan="2">ESD Test</td><td>Air Discharge:
Apply 2 KV with 5 times
Discharge for each polarity +/-

Contact Discharge:
Apply 250 V with 5 times
discharge for each polarity +/-</td></tr>
<tr><td>1. Temperature ambiance : 15℃～35℃
2. Humidity relative : 30%～60%
3. Energy Storage Capacitance(Cs+Cd) : 150pF±10%
4. Discharge Resistance(Rd) : 330Ω±10%
5. Discharge, mode of operation :
Single Discharge (time between successive discharges at least 1 sec)
(Tolerance if the output voltage indication : ±5%)</td></tr>
<tr><td>6</td><td>Vibration Test (Packaged)</td><td>1. Sine wave 10 55 Hz frequency (1 min/sweep)
2. The amplitude of vibration :1.5 mm
3. Each direction (X、Y、Z) duration for 2 Hrs</td></tr>
<tr><td>7</td><td>Drop Test (Packaged)</td><td><table><tr><th>Packing Weight (Kg)</th><th>Drop Height (cm)</th></tr><tr><td>0 ~ 45.4</td><td>122</td></tr><tr><td>45.4 ~ 90.8</td><td>76</td></tr><tr><td>90.8 ~ 454</td><td>61</td></tr><tr><td>Over 454</td><td>46</td></tr></table>Drop Direction :※1 corner / 3 edges / 6 sides each 1time</td></tr>
</table>

5. PRECAUTION RELATING PRODUCT HANDLING

5.1 SAFETY

5.1.1 If the LCD panel breaks , be careful not to get the liquid crystal to touch your skin.

5.1.2 If the liquid crystal touches your skin or clothes , please wash it off immediately by using soap and water.

5.2 HANDLING

5.2.1 Avoid any strong mechanical shock which can break the glass.

5.2.2 Avoid static electricity which can damage the CMOS LSI—When working with the module , be sure to ground your body and any electrical equipment you may be using.

5.2.3 Do not remove the panel or frame from the module.

5.2.4 The polarizing plate of the display is very fragile. So , please handle it very carefully ,do not touch , push or rub the exposed polarizing with anything harder than an HB pencil lead (glass , tweezers , etc.)

5.2.5 Do not wipe the polarizing plate with a dry cloth , as it may easily scratch the surface of plate.

5.2.6 Do not touch the display area with bare hands , this will stain the display area.

5.2.7 Do not use ketonics solvent & aromatic solvent. Use with a soft cloth soaked with a cleaning naphtha solvent.

5.2.8 To control temperature and time of soldering is 320±10°Cand 3-5 sec.

5.2.9 To avoid liquid (include organic solvent) stained on LCM .

5.3 STORAGE

5.3.1 Store the panel or module in a dark place where the temperature is 25℃ ±5℃ and the humidity is below 65% RH.

5.3.2 Do not place the module near organics solvents or corrosive gases.

5.3.3 Do not crush , shake , or jolt the module.

5.4 TERMS OF WARRANTY

5.4.1 Applicable warrant period

The period is within thirteen months since the date of shipping out under normal using and storage conditions.

5.4.2 Unaccepted responsibility

This product has been manufactured to your company's specification as a part for use in your company's general electronic products. It is guaranteed to perform according to delivery specifications. For any other use apart from general electronic equipment , we cannot take responsibility if the product is used in nuclear power control equipment , aerospace equipment , fire and security systems or any other applications in which there is a direct risk to human life and where extremely high levels of reliability are required.

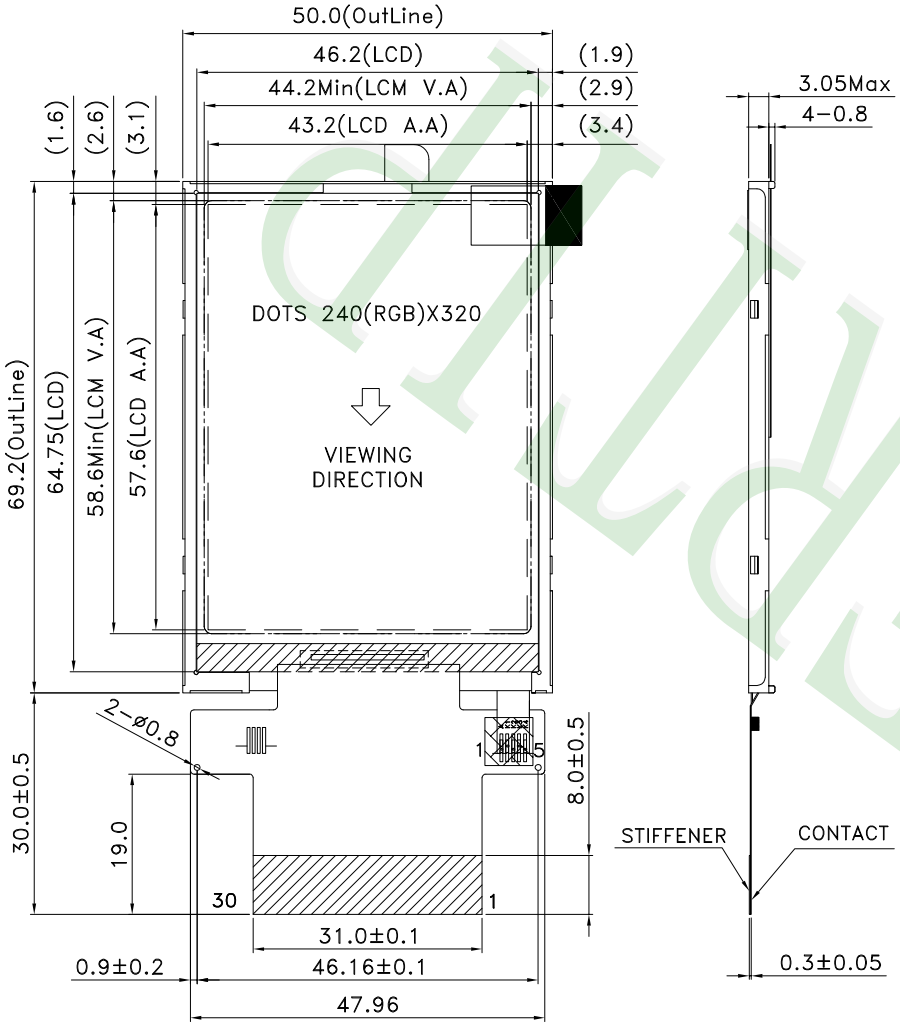

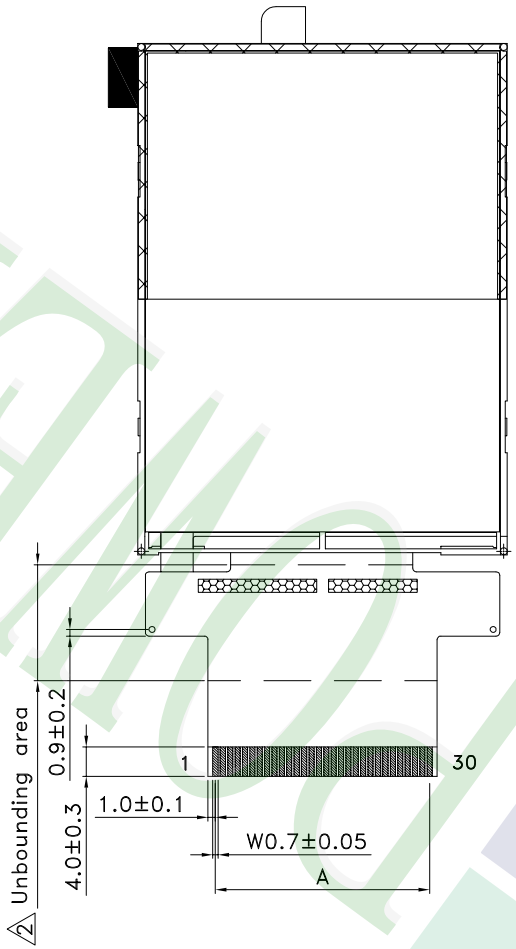

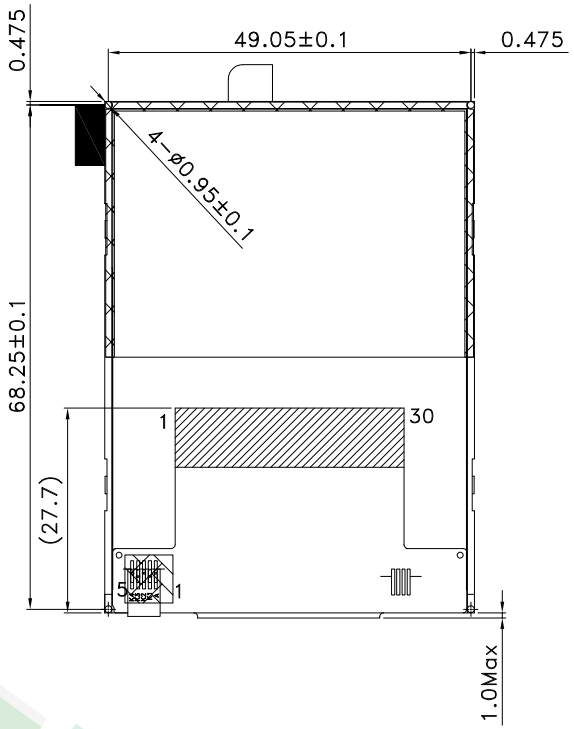

NOTES:

1.)LCD TYPE:a-Si TFT
2.)LCD DISPLAY: POSITIVE/TRANSMISSIVE
3.)VIEWING DIRECTION:12 O'CLOCK
4.)THE TOLERANCE UNLESS CLASSFIED ±0.3mm
THE R FOR NOT ASSIGNED 0.5±0.1mm
5.)DRIVER IC: ILI9341
6.)A:P1.0X29=29.0±0.05
7.) COMPONENT AREA HEIGHT 1.0 MAX.
8.)FPC suggested connector : KYOCERA(00-6200 307 032 800) or compatible.

REV	REV BY	REVISER	DATE
007			
006			
005			
004			
003			
002	Add FPC suggested connector	Eva	2014/03/27
001	NEW DRAWING	Winnie	2012/08/03

PART NO: PH240320T-063-L-Q

DRAWING NAME : LMD-PH240320T-063-L-Q

TITLE: LCD MODULE DRAWING

久正光電股份有限公司
POWERTIP TECHNOLOGY CORPORATION

Design	Eva Liao	(3)	Surface		
Check	Tina Chen	Unit	MM	Material	
Approve	Linda Lee	Scale	FIT	Thickness	
		Page	1/1	Quantity	

Length(Min) (mm) \ Tolerance Precision	Precision Level
1 ~ 4	-
4 ~ 16	-
16 ~ 63	-
63 ~ 250	-
250 ~ 1000	-

PT-A-054-01

Ver.002

Documents NO.	PKG-PH240320T-063-L-Q

LCM包裝規格書
LCM Packaging Specifications

Approve	Check	Contact
Linda Lee	Tina Chen	Eva Liao

1.包裝材料規格表 (Packaging Material) : (per carton)

No.	Item	Model	Dimensions (mm)	1Pcs Weight	Quantity	Total Weight
1	成品 (LCM)	PH240320T-063-L-Q	69.2 X 50	0.021	432	9.072
2	抗靜電氣泡(1)Bubble Bag	BAG100080BWABA	100 X 80	0.0012	432	0.5184
3	A2-1隔板(2)A2-1 Partition	BX29500072BZBA	295 X 72 X 3.0	0.0109	56	0.6104
4	B2-1隔板(4)B2-1 Partition △2	BX24500072BZBA △2	245 X 72 X 3.0	0.0094	32	0.3008
5	氣泡紙(4)Bubble Sheet	BAG280240BWABA	280 X 240	0.006	16	0.096
6	C2內盒(5)Product Box	BX31025580AABA	310 X 255 X 86	0.16	8	1.28
7	外紙箱(6)Carton	BX52732536CCBA	527 X 325 X 360	0.83	1	0.83
8						
9						

2.一 整箱總重量 (Total LCD Weight in carton) : 12.7 Kg±10%

3.單箱數量規格表 (Packaging Specifications and Quantity) :

(1)Quantity Of Spacer : A2-1隔板 X 7 △2 B2-1隔板 X 4

(2)Total LCM quantity in carton : quantity per box 54 x no of boxes 8 = 432

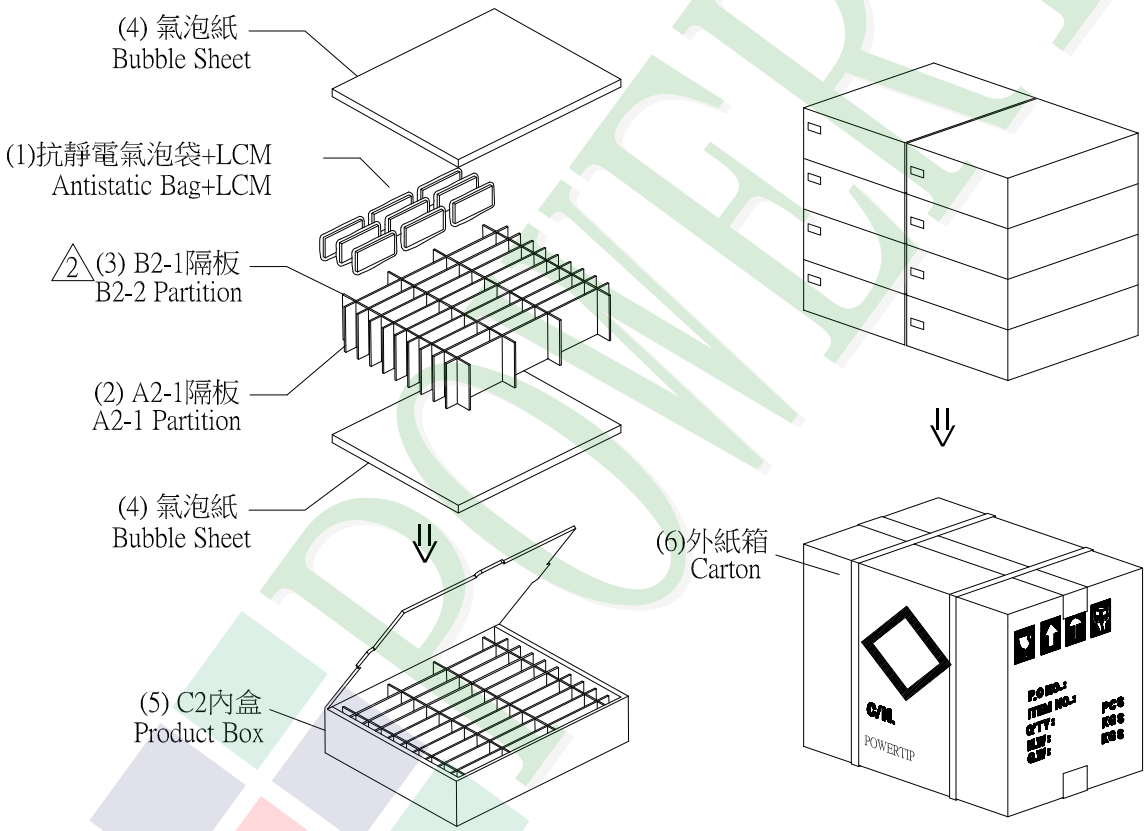

特 記 事 項 (REMARK)

4. LCM排放示意圖(前後間隔不放置):

4. LCM placed as figure showing:

(First and last slot should be empty)

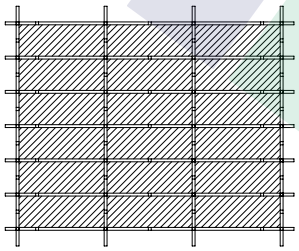

模組(LCM) X 3pcs.